ZONING ORDINANCE – DRAFT #3

MUNICIPALITY OF MONROEVILLE

JUNE 9, 2023

ARTICLE I – BASIC PROVISIONS 5
§101 Title 5
§102 Effective Date 5
§103 Defined Words 5
§104 Key Community Goals and Growth Management Objectives 5
§105 Zoning Map 8
§106 Compliance 8
§107 Severability 8
§108 Interpretation 8
§109 Warning and Disclaimer of Liability 8
§110 Amendments 8
§111 Repeal 8
ARTICLE II – DEFINITIONS 11
§201 General 11
§202 Terms Defined 11
§203 Fair Housing Act 75
ARTICLE III – DISTRICT REGULATIONS 77
§301 Designation of Zoning Districts 77
§302 Zoning District Map 77
§303 Determination of Zoning District Boundaries 77
§304 Split Lot Zoning 78
§305 Residential Zoning Districts 82
§306 Residential Zoning Districts Lot and Yard Requirements 83
§307 Commercial Zoning Districts 84
§308 Commercial Zoning Districts Lot and Yard Requirements 85
§309 Industrial Zoning Districts 86
§310 Industrial Zoning Districts Lot and Yard Requirements 86
§311 Special Zoning Districts 87
§312 Special Zoning Districts Lot and Yard Requirements 87
§313 Special Zoning Districts Rear and Side Yard Separation Standards 88
§314 Lots Abutting More Than One Street 89
§315 Supplemental Lot and Yard Requirements 89
§316 Supplemental Height Regulations 89
§317 All Other Uses 90
§318 Site Plan Review Checklist 91
§319 Inspection of Site Development Work 95
§320 Zoning Use Chart: 97
ARTICLE IV – OVERLAY DISTRICTS 104
§401 Purpose of Floodplain Overlay (FPO) District 104
§402 Floodplain Overlay (FPO) District General Provisions 104
§403 Floodplain Overlay (FPO) Alteration or Relocation of Watercourse 105
§404 Floodplain Overlay (FPO) District Administration 106
§405 Floodplain Overlay District Identification of Floodplain Areas 113
§406 Floodplain Overlay District Uses and Provisions 115
§407 Floodplain Overlay District General Technical Provisions 118
§408 Floodplain Overlay District Existing Lots or Parcels of Record and Newly Created Lots or Parcels 125
§409 Floodplain Overlay District Existing Structures in Identified Floodplain Areas 126
§410 Floodplain Overlay District Variances 126
§410 Purpose of Landslide Prone Overlay (LSO) District 128
§411 Effect of Landslide Prone Overlay (LSO) District Regulations 128
§412 Purpose of Steep Slope Overlay (SSO) District 129
§413 Development on Slopes in the Steep Slope Overlay (SSO) District 129

DRAFT

§414 Purpose of Medical Overlay (MO) District 133
§415 Medical Overlay (MO) District Development Regulations 133

ARTICLE V – CONDITIONAL USE 141
§501 Applicability 141
§502 Procedure for Conditional Use Applications 141
§503 General Standards and Criteria for Conditional Use 143
§504 Specific Standards and Criteria for Conditional Use 144

ARTICLE VI – PLANNED RESIDENTIAL DEVELOPMENT (PRD) 290
§601 Purpose 290
§602 Development Plan Required 290
§603 Compliance 290
§604 Pre-Application Conference 291
§605 Tentative Plan Application Procedure 291
§606 Tentative Plan Application Content 291
§607 Public Hearing 292
§608 Tentative Plan Approval Criteria 293
§609 Council Action on Tentative Plan Application 293
§610 Status of Plan after Tentative Approval 295
§611 Final Plan Application Procedure 295
§612 Final Plan Application Content 296
§613 Council Action on Final Plan Application 296
§614 Recording 297
§615 Abandonment and Revocation 297
§616 Improvements 297
§617 Design Standards 298
§618 Deviation by Waiver Prior to Final Plan Approval 303
§619 Enforcement and Modification of a Final Approved Plan 303

ARTICLE VII – PLANNED NONRESIDENTIAL DEVELOPMENT (PLANNED GROUP UNIT) 306
§701 Purpose 306
§702 Master Plan Required 306
§703 Compliance with Other Provisions Required 307
§704 Application and Review Procedures 307
§705 Other Agencies to Review 311
§706 Master Plan Approval 311
§707 Application for Final Master Plan Lot Approvals 311
§708 Guarantee of Improvements (Performance Bond) 311
§709 Master Plan Site Requirements and Uses 311
§710 Specific Standards and Criteria 313
§711 Common Open Space 315
§712 Public Improvements 315
§713 Variances and Modifications 315
§714 Enforcement 316

ARTICLE VIII – SUPPLEMENTAL REGULATIONS 319
§801 Purpose 319
§802 Accessory Structures and Uses 319

DRAFT

§803 Air Conditioning Systems/Mechanical Equipment 319
§804 Crematory 320
§805 321
§806 Drive-Thru Restaurant.....322
§807 Drive-in Restaurant 326
§808 Fences and Hedges 326
§809 Film Crew/Movie Production 327
§810 Food Trucks 327
§811 Landscaping, Buffer Yards and Screening 329
§812 Laundromat (Self Service Laundry) 343
§813 Medical Clinic 343
§814 Mobile, Modular, Industrialized or Manufactured Homes on Individual Lots 343
§815 Municipal Waste / Landfill.....344
§816 Outdoor Dining Area, Accessory to the Principal Use.....349
§817 Outdoor Storage 351
§818 Performance Standards 353
§819 Portable Outdoor Storage (Shipping Containers) 356
§ 358
§821 School.....359
§822 Solar Energy Facility, Accessory to the Principal Use 360
§823 Swimming Pools Accessory to the Principal Use.....361

ARTICLE IX – OFF-STREET PARKING AND LOADING 362
§901 General Requirements 362
§902 Parking Lot Design Requirements.....366
§903 Parking Garage Design Standards.....367
§904 Minimum Parking Requirements 368
§905 Parking Demand Analysis 372
§906 ADA Accessible Parking Requirements.....372
§907 Off-Street Loading Berth 374
§1001 Application of Regulations.....377
§1002 General Regulations 377
§1003 Specific Sign Regulations.....383
§1004 Signs Authorized in All Residential Zoning Districts.....395
§1005 Signs Authorized in the Conservancy Zoning District 396
§1006 Signs Permitted in Commercial, Special Use and Manufacturing Zoning Districts.....396
§1007 Signs Authorized for Shopping Center and Multi-Tenant Developments 398

ARTICLE XI – NONCONFORMING USES, STRUCTURES AND LOTS.....401
§1101 Nonconforming Lots 401
§1102 Nonconforming Structures.....401
§1103 Nonconforming Uses.....403
§1104 Continuation.....404
§1105 Abandonment or Discontinuance of Nonconforming Uses.....405

ARTICLE XII – ZONING HEARING BOARD 408
§1201 Membership 408
§1202 Applicability of the Municipalities Planning Code 408

DRAFT

§1203 Removal of Members 408
§1204 Organization of the Board 408
§1205 Expenditures for Services 408
§1206 Hearings 409
§1207 Zoning Hearing Board Decisions 410
§1208 Jurisdiction 411
§1209 Variances 411
§1210 Appeal of Zoning Officer's Determination 412
§1211 Special Exceptions 412
§1212 Parties Appellant before the Board (Appeals) 430
§1213 Time Limitations 430
§1214 Stay Of Proceedings 431

ARTICLE XIII – PLANNING COMMISSION 433
§1301 Membership 433
§1302 Applicability of the Municipalities Planning Code 433
§1303 Removal of Members 433
§1304 Organization of the Planning Commission 433
§1305 Expenditures for Services 433
§1306 Powers and Duties of the Planning Commission 434

ARTICLE XIV – ADMINISTRATION AND ENFORCEMENT 436
§1401 Appointment of the Zoning Officer 436
§1402 Duties of the Zoning Officer 436
§1403 Enforcement 437
§1404 Enforcement Remedies 437
§1405 General Permit Regulations 438
§1406 Permit Application and Issuance Procedure (Zoning Permit) 438
§1407 Fee Schedule 441
§1408 Guarantee Of Improvements (Performance Bond—Refer to SALDO Ord. 2525) 441
§1409 Amendments to Zoning Ordinance 441
§1410 Landowner Curative Amendments 442
§1411 Municipal Curative Amendments 443

DRAFT

ARTICLE I – BASIC PROVISIONS

§101 Title

This Ordinance may be cited as the "Municipality of Monroeville Zoning Ordinance".

§102 Effective Date

This Ordinance shall take effect on _____.

§103 Defined Words

Words used in a special sense in this Ordinance are defined in Article II – Definitions.

§104 Key Community Goals and Growth Management Objectives

The Key Community Goals and Growth Management Objectives, which are the basis for the provisions of this Ordinance, are set forth in the Municipality of Monroeville Comprehensive Plan, adopted January 10, 2006. The Monroeville Comprehensive Plan provides a focused vision for guiding the future, as well as a strategic action plan for the implementation of the Key Community Goals and Growth Management Objectives and defines the intent of the Zoning Ordinance. The objectives are adopted as a statement of legislative findings and may be used in evaluating any proposed additions or deletions to the Zoning Ordinance. In addition to the *Comprehensive Plan*, the Municipality has also entered into a Joint *"Implementable Comprehensive Plan"* with Churchill Borough and Wilkins Township; adopted an *"Active Transportation Plan"* and "*Streetscape Plan*". These documents (and their subsequent revisions and amendments) should also be referenced when considering development within Monroeville.

A. Land Use: To address and encourage the revitalization and reuse of the older commercial and residential infill areas while protecting the integrity of the undeveloped land. The creation and implementation of land use plans shall seek to achieve the foregoing objectives and to:

1) Achieve the purpose for which each Zoning District is intended, as stated in each Article of this Ordinance;

2) Avoid incompatible land use if possible and protect against the detrimental effect of incompatible land uses through planting, open space and natural breaks in topography;

3) Concentrate development where possible to prevent sprawl, conserve open space and make full use of utilities and services;

4) Regulate uses and development in floodplains which, acting alone or in combination with other uses and development, may cause unacceptable increases in flood heights, velocities and frequencies;

5) Restrict and prohibit certain uses, activities, and development from locating within areas subject to flooding;

6) Require all those uses, activities, and developments that occur in floodplains to be protected and floodproofed against flooding and flood damage;

DRAFT

7) Protect individuals from buying lands and structures, which are unsuited for intended purposes because of flood hazards; and

8) Create Mixed Use Districts that combine commercial, retail and residential uses.

B. Community Development: To maintain a balance between residential and commercial development, in order to preserve Monroeville's unique sense of community and quality of life. The provision of the necessary infrastructure of utilities and transportation arteries shall be pursued by:

1) The extension of the municipal improvements of water lines, storm and sanitary sewers and roads, and their improvement where economically feasible to guide and promote development; and

2) The encouragement of public utilities to improve and extend services consistent with the objectives set forth herein.

C. Housing and Neighborhood Quality: To preserve and enhance the strong residential base and mix of housing types while promoting increased pedestrian access, park and recreation opportunities throughout the community. The provision of safe, adequate and attractive housing for the entire population of the community shall be pursued by:

1) The provision of a wide range of housing density alternatives and a mix of housing types, correlating residential density and housing type with topography, environmental conditions, and the capacity of and distance from existing and proposed utilities, streets and community facilities;

2) The removal of dilapidated housing, the rehabilitation of deteriorating housing, the maintenance of sound housing and the development of new housing; and

3) The promotion of an attractive residential environment through the implementation of the other objectives set forth herein.

D. Community Facilities and Services: To ensure that municipal administration, services, and facilities are provided and coordinated in an efficient and effective manner to meet the changing needs of the community; provide recreational and community facilities. The provision of recreational and community facilities shall be pursued by:

1) The creation of outdoor and indoor recreational facilities to accommodate the existing and future population;

2) The promotion of schools and parks in close proximity to each other to decrease duplication of services and to provide the greatest value for public expenditures;

3) The promotion of acquisition or dedication of natural open space for park and recreational purposes;

4) The provision of residential areas with adequate commercial, governmental, recreational and educational facilities; and,

5) The preservation of historical landmarks.

E. Transportation: To improve the safe flow of traffic and reduce the overall traffic congestion while encouraging multiple modes of public/private transportation in the

DRAFT

Municipality. The "Active Transportation Plan" (adopted by Resolution 19-54 by the Municipality on September 10, 2019) helps to illustrate various options and the future vision for travelling throughout the Municipality. The provision of the necessary infra-structure of utilities and transportation arteries shall be pursued by:

1) Traffic planning and control which will provide safe, rapid and convenient movement of people and goods within and through the Municipality, with a separation of through and local traffic, provision for pedestrians, and minimal disruption of existing and proposed development patterns and community integrity;

F. Economic Development: To market the Municipality's location advantage and encourage a desirable business environment while promoting diversified employment opportunities. The "Implementable Comprehensive Plan", which was adopted by Churchill Borough, the Municipality of Monroeville and Wilkins Township is a guide to show how neighboring communities can work in unison to achieve desirable economic goals (Monroeville Resolution 18-16 March 23, 2018).

1) The promotion of balanced economic growth and employment opportunities;

2) Increase property values, employment opportunities, and the economic base of the community;

3) The concentration of commercial and industrial uses in the areas where streets and utilities can provide the necessary services and where conflicts with other uses can be minimized through site design and transitional provisions; and

4) The implementation of the other objectives set forth herein.

G. Route 22 Business Corridor: To develop a new downtown, by phasing in landscaped development blocks; evolving away from the strip center orientation and moving towards storefront retail in a well-designed and maintained environment.

H. Environment*:* To continue to protect environmentally sensitive areas as well as support the preservation and expansion of green spaces within the Municipality. The preservation and improvement of the environment shall be pursued by:

1) Preserving and improving the natural environment;

2) The elimination of visual and physical blight such as overhead utility lines, concentrations of signs of excessive size and proximity, large expanses of unbroken pavement and dilapidated structures;

3) The preservation of natural topography and wooded steep slopes, including the limiting of hillside development beyond a reasonable gradient, and the control of floodplains and water sheds;

4) The reclamation of derelict land; and

5) The municipal acquisition of and the promotion of dedication of natural open space and wooded steep slopes, in order to link the existing and proposed park sites and neighborhoods and to prevent ecological problems resulting from extensive cut and fill necessary to develop wooded steep slopes.

DRAFT

§105 Zoning Map

A map entitled "Monroeville Zoning District Map" is hereby adopted as part of this Ordinance. The Zoning Map shall be kept on file for examination in the offices of the Department of Community Development in the Monroeville Municipal Center.

§106 Compliance

No structure shall be located, erected, constructed, reconstructed, moved, altered, converted, or enlarged, nor shall any structure or land be altered or used, except in full compliance with all the provisions of this Ordinance and after the lawful issuance of all permits and certificates required by this Ordinance.

§107 Severability

If any provision of this Ordinance or the application of any provision to particular circumstances is held to be invalid, the remainder of the Ordinance or the application of such provision to other circumstances shall not be affected. If any section, subsection, sentence, clause, phrase or word of this Ordinance is for any reason held illegal or invalid by any court of competent jurisdiction, such provision shall be deemed a separate, distinct and independent provision, and such holding shall not render the remainder of this ordinance invalid.

§108 Interpretation

The provisions of this Ordinance shall be held to be the minimum requirements for the protection of the health, safety, morals and general welfare of the residents and those who work and visit the Municipality of Monroeville.

§109 Warning and Disclaimer of Liability

The degree of flood protection sought by the provisions of this Ordinance is considered reasonable for regulatory purposes and is based on acceptable engineering methods of study. Larger floods may occur on rare occasions. Flood heights may be increased by manufactured or natural causes, such as ice jam and bridge openings restricted by debris. This Ordinance does not imply that areas outside the floodplain districts or that land uses permitted within such districts will be free from flooding or flood damages. This Ordinance shall not create liability on the part of the Municipality of Monroeville or any officer or employee thereof for any flood damages that result from reliance on this Ordinance or any administrative decision lawfully made thereunder.

Police Powers. The Municipality, by granting any permit or taking any other action pursuant to this chapter, does not waive, reduce, lessen or impair the lawful police powers vested in the Municipality under applicable federal, state and local laws and regulations.

§110 Amendments

All applicable ordinances, statutes, regulations, codes and resolutions shall be subject to amendments.

§111 Repeal

All ordinances, including Ordinance No. 1443 and all amendments thereto, or parts of ordinances inconsistent with the provisions of this Ordinance are hereby repealed.

DRAFT

~ END OF SECTION ~

DRAFT

THIS PAGE INTENTIONALLY LEFT BLANK

DRAFT

ARTICLE II – DEFINITIONS

§201 General
§202 Terms Defined
§203 Fair Housing Act

§201 General

Certain words used in this Ordinance shall have the meanings indicated:

A. Words used in the present tense shall include the future; words used in the singular number shall include the plural, and plural shall include the singular, unless the context clearly indicates the contrary;

B. The word "shall" is mandatory and not discretionary. The word "may" is permissive;

C. The word "and" indicates that all connected items, conditions, provisions or events shall apply;

D. The word "or" indicates that the connected items, conditions, provisions or events may apply singly or in any combination;

E. The words "either…or" indicates that the connected items, conditions, provisions or events may apply separately but not in any combination; and

F. Any use of gender specific words (his, hers, him, her) shall imply both genders.

In case of any difference of meaning or implication between the text of this Article and any caption, illustration or table, the text shall control.

§202 Terms Defined

ABANDONED PROPERTY: Any real property, including, but not limited to vacant lots, buildings and structures located in the Municipality, that is subject to a mortgage and is either: (1) in default of a mortgage for which a mortgagee has obtained a judgment in foreclosure; (2) in default of a mortgage and subject to an application or proceeds for a tax deed or pending tax claim bureau or tax assessor sale for unpaid property taxes; (3) in default of a mortgage and subject to an application or proceedings for a sheriff sale for unpaid claims, debts or obligations; or (4) in default of a mortgage and has been transferred to a mortgagee by deed in lieu of foreclosure, or any similar document. The designation of real property as "abandoned" shall remain in place until such time as the property is sold or transferred to a new owner, the foreclosure action has been dismissed, and any default on the mortgage has been cured.

ABANDONMENT: – The plugging of the well and the restoration of any well site as required by this Ordinance.

ABUTTING: - See: *"Adjoining Property Owner."* what are the differences between: abut, adjacent, adjoin,

ACCESSORY DWELLING UNIT: A dwelling unit that is either attached to the principal permitted building or to a permitted accessory building on a lot.

DRAFT

ACCESSORY OUTDOOR DINING AREA: An area with seats and/or tables and decorative accessories, located outdoors of a restaurant, coffee shop, tavern, bar, other food service establishment.

ACCESSORY STRUCTURE: A detached, subordinate structure, the use of which is customarily incidental, subordinate to that of the principal structure, which is not used or not intended to be used for living or sleeping by human occupants and located on the same lot as the principal structure.

ACCESSORY USE: A use conducted on the same lot as the principal use of the structure to which it is related; a use that is clearly incidental to, and customarily found in connection with, such principal use.

ACT or ACT 97: The Pennsylvania Solid Waste Management Act of 1980 (P.L. 380, No. 97, July 7, 1980).

ACTIVE TRANSPORTATION PLAN: a plan to create ways for residents to get where they need and want to go – safely, conveniently, and comfortably – without the use of a motor vehicle. Adopted by resolution 19-54 September 10, 2019.

ADDRESS SIGN: A sign or individual lettering numbering that designate the street number and/or street name for identification purposes, as designated by the United States Postal Service.

ADJACENT: See: *"Adjoining Property Owner."* what are the differences between: abut, adjacent, adjoin,

ADJOINING PROPERTY OWNER: Any real property or properties the border of which is (are) shared in part or in whole with that of the Property, or that would be shared in part or in whole with that of the Property but for a street, road, or other public thoroughfare separating the properties. what are the differences between: abut, adjacent, adjoin,

ADVERTISING VEHICLE: Any vehicle and or trailer used as a vehicle to which a sign is affixed in such a manner that the carrying of the sign is used for advertisement or is otherwise not incidental to its primary purpose.

AGRICULTURE: Any use of land or structures for farming, dairying, pasturage, agriculture, apiary, horticulture, floriculture, arboriculture, or animal or poultry husbandry. Uses permitted in conjunction with an agriculture use may include barns, stables, corn cribs, silos, kennels and any other use or structure that is clearly related to an agricultural operation. Does not include cultivation of marijuana or any use associated with marijuana—see: *"Medical Marijuana Grower / Processor Facility".*

AGRICULTURE FARM: See: *"Agriculture".*

AGRICULTURAL ACTIVITIES: Activities including, but not limited to, livestock and poultry raising; field, row and tree crops; forest and tree products; sale of products produced on the premises; and other customary farm structures. Not included are farm-oriented commercial or industrial activities or operations, such as food or livestock processing plants, holding pens, slaughterhouses, or similar uses which handle products not produced on the immediate premises. Does not include cultivation of marijuana or any use associated with marijuana—see: *"Medical Marijuana Grower / Processor Facility".*

AGRICULTURAL COMMODITY: Any of the following transported or intended to be transported in commerce.

1) Agricultural, aquacultural, horticultural, floricultural, viticultural or dairy products.

2) Livestock and the products of livestock.
3) Ranch-raised fur-bearing animals and the products of ranch-raised fur-bearing animals.
4) The products of poultry or bee raising.
5) Forestry and forestry products.
6) Any products raised or produced on farms intended for human consumption and the processed or manufactured products of such products intended for human consumption.

AGRICULTURAL OPERATION: An enterprise that is actively engaged in the commercial production and preparation for market of crops, including, livestock and livestock products and in the production, harvesting, and preparation for market or use of agricultural, agronomic, horticultural, silvicultural, and aquacultural crops and commodities. The term includes any enterprise that implements changes in production practices and procedures or types of crops, livestock, livestock products, or commodities produced consistent with practices and procedures that are normally engaged in by farmers or are consistent with technological development within the agricultural industry. Does not include cultivation of marijuana or any use associated with marijuana—see: *"Medical Marijuana Grower / Processor Facility".*

AGRICULTURAL WASTE: Any poultry and livestock manure, or residual materials in liquid or solid form, generated in the production, and marketing of poultry, livestock, fur-bearing animals and their products, provided such waste is not a hazardous waste. The term includes the residual materials generated in producing, harvesting, and marketing of all agronomic, horticultural, silvicultural and agricultural crops or commodities grown on what are usually recognized and accepted as farms, forests, or other agricultural lands.

AIR BED AND BREAKFAST (AIR B&B): See: *"Bed and Breakfast."*

ALLEE: An arrangement of street trees whereby a canopy effect is created due to the regular and combined spacing of the trees.

ALLEY: A public or private way permanently reserved as a secondary means of access to an abutting property. A narrow service access to the rear of more-urban buildings providing service areas, parking access, and utility easements. (Alleys, as they are used by trucks and must accommodate dumpsters, should be paved from building face to building face, with drainage by inverted crown at the center.) what are the frontage/setback requirements for an alley?

ALLOWABLE DRILLING AREA: The area within the well pad that is approved for wells to be drilled.

ALL TERRAIN VEHICLE (ATV): Also See: "*Utility Terrain Vehicle (UTV)". A* vehicle with treads, wheels, or both, designed to traverse varied, uneven terrain as well as roads. Abbreviation: ATV.

ALTERATIONS: As applied to a building or structure, a change or rearrangement in the structural parts or in the exit facilities, or an enlargement, whether by extending on a side or by increasing in height, or the moving from one location to another, or any change in use from that of one zoning district classification to another. Compare with definition of alteration from the IBC

ALTERATIONS, STRUCTURAL: Any change in the supporting members of a building, such as bearing walls, columns, beams, girders, or foundations.

DRAFT

AMUSEMENT DEVICE: Any mechanical, electrical, or electromechanical device, machine, or apparatus, whatsoever, for the playing of games and amusements, which devices or apparatus are commonly known as "pinball machines", "video games", and "jukeboxes", or upon which games are played, or any device on which music is played after the insertion therein of a coin or other disc, slug or token or for which fees are paid to an attendant.

AMUSEMENT PARK: An establishment existing primarily for entertainment purposes and offering rides and exhibitions for a fee.

AMUSEMENT USE: A theater, stadium, arena, bowling alley, or related facility for the presentation of musical, theatrical, or sporting events where the number of spectators normally is greater than the number of players and where such use is not accessory to a school or church.

ANCILLARY CAFETERIA: A restaurant, which is located within a shopping center, industrial park, office center or apartment complex, having a floor area of not more than three thousand (3,000) square feet, and intended to primarily serve the employees, patrons or residents of the complex within which it is located.

ANIMAL HUSBANDRY: The keeping or raising of livestock, horses and poultry.

ANIMATION OR VIDEO DISPLAY: Changing of a message or background of a sign in a manner or method of display characterized by motion or pictorial imagery, which may or may not include text and depicts action or a special effect to imitate movement, the presentation of pictorials or graphics displayed in a progression of frames which give the illusion of motion, including but not limited to the illusion of moving objects, moving patterns or bands of light, or expanding or contracting shapes. Video display signs include projected images or messages with these characteristics onto buildings or other objects.

ANTENNA: Any system of wires, rods, discs, panels, flat panels, dishes, whips, or other similar devices used for the transmission or reception of wireless signals. An antenna may include an omnidirectional antenna (rod), directional antenna (panel), parabolic antenna (disc) or any other wireless antenna. An antenna shall not include Commercial Communication Towers as defined herein.

APARTMENT: A dwelling unit in a multi-family residential structure or multi-use structure containing three (3) or more dwelling units.

APIARY: A place where bees are kept; a collection of beehives.

APPLICANT: A developer and/or landowner, as hereinafter defined, including heirs, successors, and assigns, who has filed an application for subdivision and/or land development. use definition from the MPC—it is very similar

APPLICATION FOR DEVELOPMENT: Every application, whether preliminary or final, required to be filed and approved prior to the start of construction or development or use, including, but not limited to, an application for zoning approval, for the approval of a subdivision or land development or for the approval of a development plan. Every application for development must include the form designated by the Municipal Manager and all other plans and information required by this Code.

ARCHITECT: An architect registered by the Commonwealth of Pennsylvania. See *"Registered Professional*".

ARRAY: Any number of electrically connected photovoltaic (PV) modules providing a single electrical output.

DRAFT

ASCA: American Society of Civil Engineers.

ASME: American Society of Mechanical Engineers.

ASSISTED LIVING FACILITY: Also See: *"Continuing Care Facility", "Group Home", "Hospice", "Nursing Home", "Personal Care Home Facility", "Skilled Nursing Facility."* Housing for elderly or disabled people that provides nursing care, housekeeping, and prepared meals as needed. A system of housing and limited care that is designed for senior citizens who need some assistance with daily activities but do not require care in a nursing home. Including Continued Care Facility, Group Home, Hospice, Personal Care Home Facility, Skilled Nursing Facility. The terms shall not include hospitals, psychiatric hospitals, or alcohol and drug abuse rehabilitation centers.

ATHLETIC FACILITY: A room or building where people go to play sports or exercise, including a Day Spa, Fitness Center, Gymnasium, Membership Club, Recreational Facility, and Sports Facility.

BANNER: A sign with or without characters, letters or illustrations applied to cloth, paper, fabric or other non-rigid material. A Banner is considered a Temporary Sign.

BANQUET HALL: a room or building for the purpose of hosting a party, banquet, wedding or other reception, or other social event.

BAR: A premises used primarily for the sale or dispensing of liquor by the drink for on-site consumption and where food may be available for consumption on the premises as accessory to the principal use.

BARN: A farm building used for storing grain, hay, or straw or for housing livestock and or farming equipment.

BASE: The transitional point between the valley floor and the hillside where a steep slope of twenty-five percent (25%) or greater interfaces with less steeply sloped land below and beyond the SSO, Steep Slope Overlay boundary.

BASE FLOOD: A flood which has one percent (1%) chance of being equaled or exceeded in any given year (also called the 100-year flood or one percent (1%) annual chance flood).

BASE FLOOD DISCHARGE: The volume of water resulting from a Base Flood as it passes a given location within a given time, usually expressed in cubic feet per second (cfs).

BASE FLOOD ELEVATION (BFE): The elevation shown on the Flood Insurance Rate Map (FIRM) for Zones AE, AH, A1-30 that indicates the water surface elevation resulting from a flood that has a one percent (1%) or greater chance of being equaled or exceeded in any given year.

BASEMENT: A story partly below ground and having forty percent (40%) or more of its height below the *grade* of the adjoining ground.

BASIC GRADE: A reference plane representing the average of the finished ground level adjoining a structure at all its exterior walls.

BED AND BREAKFAST: Also See: *"Air B&B":* An owner-occupied single-family dwelling that contains not more than three (3) guest bedrooms in which lodging and meals are provided for compensation. Guests are not accommodated for no longer than seven (7) consecutive days.

DRAFT

BOARD: The Zoning Hearing *Board* of the Municipality of Monroeville.

BREEDING AREA: Any condition which provides the accessory environment for the birth or hatching of vectors.

BUFFER: The area of land immediately adjacent to any wetland, lake, pond, vernal pond, or stream, measured perpendicular to and horizontally from the delineated edge of the wetland, lake, pond, or vernal pond, or the top-of-bank on both sides of a stream.

BUFFER AREA: For Landfill applications--The area within a landfill property or site, generally adjacent to and parallel with the applicant's property line, for a width of three hundred (300) feet, either consisting of natural existing vegetation or created by the use of trees, shrubs, fences, and/or other berms, designed to limit the view of and/or sound from the site to adjacent sites or properties.

BUFFERYARD: A portion of the site intended to provide a visual barrier or other protection between adjacent parcels of land.

BUILDABLE AREA: That portion of a zoning lot bounded by the required front, side, and rear yards. should this definition be expanded to include what is included and excluded when making this calculation

BUILDING: A combination of materials to form a permanent structure having walls and a roof, including all manufactured homes and trailers used for human habitation.

BUILDING FACADE: That portion of any exterior elevation on the building extending from finished grade to top of the parapet, wall, or eaves and the entire width of the building elevation.

BUILDING FOOTPRINT: The ground floor area of any building, excluding residential garages and accessory sheds, measured from the outside of the exterior walls.

BUILDING HEIGHT: The vertical distance measured from the average elevation of the proposed finished grade at the front of the building to the highest point of the roof for flat roofs, to the deck line of mansard roofs and to the mean height between eaves and ridge for gable, hip, and gambrel roofs or the maximum height of any part of the structure including signage. include a diagram??

BUILDING-INTEGRATED SYSTEM: A solar photovoltaic system that is constructed as an integral part of a principal or accessory building or structure and where the building-integrated system features maintain a uniform profile or surface of vertical walls, window openings, and roofing. Such a system is used in lieu of a separate mechanical device, replacing or substituting for an architectural or structural component of the building or structure that appends or interrupts the uniform surfaces of walls, window openings and roofing. A building-integrated system may occur within vertical facades, replacing view glass, spandrel glass or other facade material; into semitransparent skylight systems; into roofing systems, replacing traditional roofing materials; or other building or structure envelope systems.

BUILDING-MOUNTED SYSTEM: A solar photovoltaic system attached to any part or type of roof on a building or structure that has an occupancy permit on file with the Municipality and that is either the principal structure or an accessory structure on a recorded parcel. This system also includes any solar-based architectural elements.

BUILDING PERMIT: Written permission issued by the proper municipal authority for the construction, repair, alteration, addition, change in occupancy, install or alter equipment by the Municipality's Building Code.

DRAFT

BUILDING SETBACK: The required minimum horizontal distance between the front yard line and the front edge of a principal structure.

BULKY WASTE: All large items of solid waste including but not limited to appliances, furniture, carpeting, and small amounts of lumber, trees, branches or stumps which may require special handling due to their size, shape, or weight.

BUSINESS SERVICES: A service shop or office providing services and sales of office supplies and equipment where the repair and maintenance of equipment is limited and does not include manufacturing or industrial operations.

CALIPER: A diameter measurement taken six inches above the ground for trees up to and including four-inch caliper size and 12 inches above the ground for larger sizes. Caliper of trees is a standard measurement used in the grading of nursery stock. remove to the SALDO???

CANOPY: A freestanding rigid multi-sided structure covered with fabric, metal or other material and supported by columns or posts embedded in the ground.

CAPON: A rooster that has been castrated before reaching sexual maturity.

CARPORT: a shelter for a car consisting of a roof supported on posts, built beside a house. A carport is considered a permanent structure.
CAR RENTAL: See: *"Vehicle Leasing".*

CARWASH: See: *"Vehicle Wash".*

CASINO: a public room or building where gambling games are played.

CELL: The smallest basic solar electric device which generates electricity when exposed to light.

CELLAR: A portion of a building having 1/2 or more of its height below the average grade of the adjoining ground.

CEMETERY: Land used or intended to be used for the interment of human remains and dedicated for cemetery purposes, including crematories, mausoleums, and mortuaries when operated in conjunction with and within the boundary of such cemetery.

CHICKEN: A common domestic fowl (Gallus domesticus) or its young.

CHICKEN RUN: An enclosed area in which chickens are allowed to walk and run about.

CHILD CARE CENTER: Any place, home, or institution which cares for four (4) or more children under the age of sixteen (16) years apart from their parents, guardians, or custodians for regular periods of time for compensation; provided, however, that the term *"Child Care Center"* shall not include or apply to bona fide schools, custody fixed by a court, children raised by blood or marriage within the third degree of the custodial person, or churches and other religious or public institutions caring for children within an institutional building. A *"Child Care Center"* is not a *"No-Impact Home-Based Business".*

CHILD-ORIENTED BUSINESS: a commercial establishment which, as one of its principal business purposes, serves and/or sells children and their family's food, apparels, goods, services, play and/or entertainment.

DRAFT

CHURCH: a building used for public Christian worship—See: *"Place of Worship."*

CIGAR BAR / LOUNGE: an establishment designated for smoking cigars, other tobacco products or accessories purchased on the premises or elsewhere

CLEAN FILL: Uncontaminated, non-water-soluble, non-decomposable inert solid material. The term includes soil, rock, stone, dredged material, used asphalt (except milled asphalt), and brick, block or concrete from construction and demolition activities that is separate from other waste and recognizable as such.

CLEAR-SIGHT TRIANGLE: Driveways shall be located and constructed so that a clear-sight triangle, as depicted below is provided. ~~Two (2) apexes of the triangle shall be located in both directions along the street centerline, seventy-five (75) feet from a point where the centerline of a driveway and street intersect. The vertex of the triangle shall be located along the centerline of the driveway, on the site and fifteen (15) feet from the property/street right-of-way line.~~ No object, including without limitation, fences, hedges, trees and other plantings, buildings, structures, walls, signs and motor vehicles, exceeding a height of three (3) feet as measured from the lowest elevation of the centerline of any abutting street, shall be temporarily or permanently placed, erected, installed or parked within the clear sight triangle required at the intersection of two (2) streets or the intersection of a driveway with a public street.

These distances seem excessive...compare to the Penn DOT Sight Distance Worksheet.

~~No permanent or temporary obstructions and/or plant materials over three (3) feet high shall be placed within the clear-sight triangle.~~

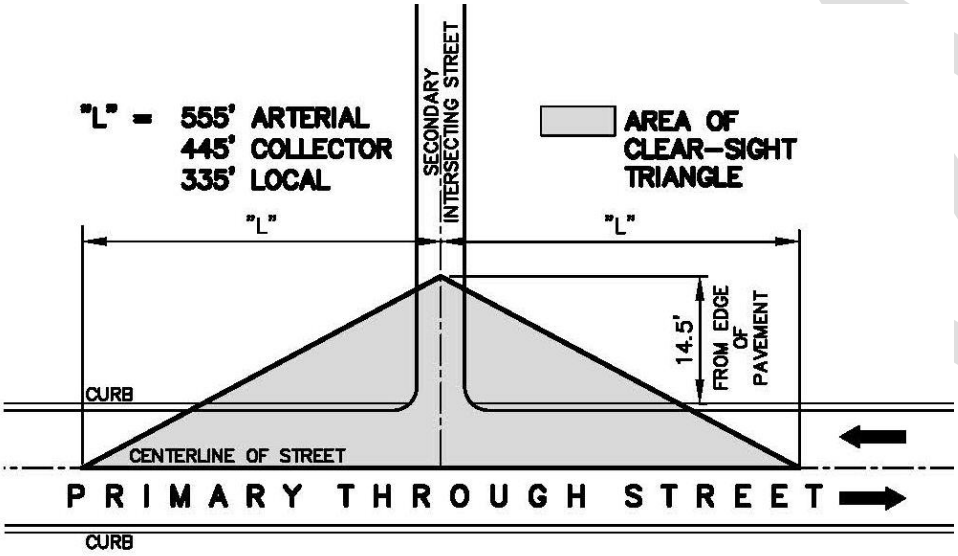

CLEAR-SIGHT TRIANGLE
REFER TO SALDO SECTION 2-8.E.

CLINIC: See: *"Medical Clinic".*

CLOSED-LOOP SYSTEM: A system utilized while drilling so that various types of pits are not used, and instead steel bins or closed containers are used to collect all drilling waste.

CLOSURE: The date on which a municipal waste processing or disposal facility permanently ceases to accept waste, and access is limited to activities necessary for post-closure care, maintenance and monitoring.

CLUB: An organization comprised mainly of the residents of the neighborhood in which it is located, the primary purpose of which is the advancement of its members or of the community in education, cultural or civic pursuits and activities. A group of people organized for a common purpose to pursue common goals, interests or activities and usually characterized by certain membership qualifications, payment of fees and dues, regular meetings and a constitution and bylaws.

CLUSTER: A development design technique used in planned residential development that concentrates buildings on a part of the site to allow the remaining land to be used for recreation, common open space, and preservation of environmentally sensitive areas.

CO-LOCATION: The mounting of one or more WCFs, including antennae, on an existing Commercial Communication Tower, or on any structure that already supports at least one Commercial Communication Antenna.

COLLECTIONS OF WATER: Those contained in ditches, pools, ponds, streams, excavations, holes, depressions, open cesspools, privy vaults, fountains, cisterns, tanks, shallow wells, barrels, troughs, urns, cans, boxes, bottles, tubs, buckets, roof gutters, tanks of flush closets, reservoirs, vessels, receptacles of any kind or other containers or devices which may hold water.

COMMERCIAL: An activity involving the sales of goods or services carried out for profit.

COMMERCIAL COMMUNICATION ANTENNA: A device, including but not limited to panels, microwave dishes and single pole/whip, which is used to collect or transmit television, radio, telephone communications or other wireless signals, situated on a non-residential site either as a principal structure, external to or attached to the exterior of any other structure. All non-tower Wireless Communications Facilities, including but not limited to, antennae and Related Equipment. Commercial Communication Antennas shall not include support structures for antennae or any Related Equipment that is mounted to the ground or at ground-level.

COMMERCIAL COMMUNICATION TOWER: A structure situated on a nonresidential site that is intended for transmitting or receiving television, radio, telephone communications and any related *building* and equipment. Any structure that is used for the purpose of supporting one or more Antennae, including, but not limited to self-supporting lattice towers, guy towers and monopoles, utility poles and light poles. Distributed Antenna System (DAS) hub facilities are considered to be Commercial Communication Towers.

COMMERCIAL COMMUTER LOT: An off-street parking lot designed and intended to provide for the storage, for limited periods of time, of operable passenger vehicles, and available for compensation, or as an accommodation to commuters.

COMMERCIAL ESTABLISHMENT: An establishment engaged in non-manufacturing or non-processing business, including, but not limited to, stores, markets, office buildings, restaurants, shopping centers and theaters.

COMMERCIAL MOTOR VEHICLE: A motor vehicle or combination of motor vehicles used in commerce to transport passengers or property if the motor vehicle:

1) Has a gross combination weight rating of 18,000 or more pounds inclusive of a towed unit with a gross vehicle weight rating of more than 10,000 pounds.

DRAFT

2) Has a gross vehicle weight rating of 18,000 or more pounds.

3) Is designed to transport 16 or more passengers, including the driver.

4) Is of any size and is used in the transportation of materials found to be hazardous for the purposes of the Hazardous Materials Transportation Act, 49 USCA § 5101 et seq. and which requires the motor vehicle to be placarded under the hazardous materials regulations 49 CFR, Chapter 173.

COMMON AREA: That area in a subdivision or planned residential development, including common open space, owned or leased and maintained by an association or other combination of persons for the benefit of the residents of the planned residential development and, if owned under the Pennsylvania Uniform Condominium Act, 68 Pa.C.S.A. § 3101 et seq., including all common elements designated for the use of all dwelling unit owners.

COMMON OPEN SPACE: A parcel of land integral to a planned residential development and subject to provisions which assure the continued availability and maintenance of such open space for the use and benefit of the residents of the planned development.

COMMONWEALTH: Commonwealth of Pennsylvania

COMMUNITY CENTER, PUBLIC: A building or structure and related facilities operated by a governmental agency, the primary function of which is available to the public for civic, educational, philanthropic, recreational or social purposes.

COMMUNITY USE: A school, playground or related recreation facility, public building or public maintenance facility.

COMMUTE: A trip from home to work or work to home.

COMMUTER: One that travels regularly from one place to another.

COMPLETELY DRY SPACE: A space which will remain totally dry during base flooding; the structure is designed and constructed to prevent the passage of water and water vapor.

COMPLETION OF DRILLING, REDRILLING AND REWORKING: The date within sixty (60) days of the completion of the drilling, re-drilling or re-working of the well site.

COMPOSTING: A controlled process of degrading organic matter by microorganisms, including but not limited to the following methods: (1) mechanical; (2) ventilated cell; and (3) windrow. The process may be anaerobic or aerobic.

COMPREHENSIVE PLAN: A document consisting of maps, charts and text, prepared in accordance with the Municipalities Planning Code and adopted by the Municipality as a guide for future development.

CONDITIONAL USE: A specific exception to the standard regulations of this Ordinance which requires approval by the Governing Body under terms and procedures and with conditions prescribed herein. from the MPC: "Conditional use," a use permitted in a particular zoning district pursuant to the provisions in Article VI.

CONDOMINIUM: A space defined by walls, floors and ceilings purchased and equipped as a dwelling unit, and including, as part of the purchase, joint ownership with the other condominium

DRAFT

owners on the lot of the facilities used in common together with responsibility for maintenance of these common areas.

CONSTRUCTION: The construction, reconstruction, renovation, repair, extension, alteration, or relocation of a *building* or structure, including the placement of mobile homes.

CONSTRUCTION / DEMOLITION WASTE: Solid waste resulting from the construction or demolition of buildings and other structures, including, but not limited to, wood, plaster, metals, asphalt substances, bricks, block, and integrated concrete. The term also includes dredging waste. The term does not include the following if they are separate from other waste and are used as clean fill:

1) Uncontaminated dredging waste, soil, rock, stone, gravel, unused brick and block and concrete; and

2) Waste from land clearing, grubbing and excavation, including trees, brush, stumps and vegetative materials.

CONSTRUCTION WASTE DUMPSTER: Also See: *"Dumpster".* A unit designed for the deposit of rubbish at sites related to the clean-out, building, construction, repair, renovation, or demolition of commercial or residential structures. The unit is usually located, on a temporary basis, on property, a driveway, or street abutting the site and is transportable to and from the site for purposes of disposal of its contents by means of a transport vehicle. A construction waste dumpster exceeds 96 gallons in size and shall not exceed 40 cubic yards in size. A construction waste dumpster includes waste disposal bags ("Bagsters'), regardless of size.

CONTINUING CARE FACILITY: Also See: *"Assisted Living Facility", "Group Home", "Hospice", "Nursing Home Facility", "Personal Care Home Facility", "Skilled Nursing Facility".* As defined in current state licensure requirements, a residential facility or planned residential development designed, operated and maintained for retired adults, which may also include skilled nursing, intermediate care or personal care facilities as defined herein. The terms shall not include hospitals, psychiatric hospitals, or alcohol and drug abuse rehabilitation centers.

CONTRACTOR'S YARD: An establishment storing or offering for sale *building* supplies, steel supplies, coal, lumber, heavy equipment, feed and grain, and similar goods, but not including the wrecking, salvaging, dismantling or storage of automobiles and similar vehicles.

CONTROLLED SUBSTANCE DISPENSATION FACILITY: Also See: "*Methadone Treatment Facility"* and *"Substance Abuse Treatment Facility".* Any public or private facility that sells, dispenses, distributes, provides and/or administers any controlled substance, as that term is defined in the Controlled Substances Act, 21 U.S.C. § 802 et seq., as the same may be amended from time to time, including, but not limited to, methadone or suboxone or similar anti-opioids, to any person known or believed by such facility or to any employee, agent or individual otherwise connected to such facility, to be physically or psychologically dependent on the use of such controlled substances, for the detoxification treatment or maintenance treatment of such dependency, unless said controlled substance is sold, dispensed, distributed, provided and/or administered for the cure or treatment of an illness, malady or disease other than controlled substance dependency. Such facilities include but are not limited to any facility licensed by the Pennsylvania Department of Health for such operations.Trant and Wratcher to review this definition for consistency with case law as per the ACED comments

CONTINUING CARE FACILITY: Also see: *"Assisted Living Facility", "Hospice", "Nursing Home Facility", "Personal Care Home Facility", "Skilled Nursing Facility".* Continuing Care Retirement Communities (CCRCs), or multi-level care facilities, provide residents with a lifetime continuum of

care. They assure the care recipient independent living as long as possible and provide for nursing assistance if or when it is needed.

CONVENIENCE STORE: a store with extended opening hours and in a convenient location, stocking a limited range of household goods and groceries. Include fuel sales in the definition from Plum: A small market that carries a limited selection of goods and is open long hours. Convenience stores may sometimes be located in conjunction with a Gas Station use but only when the Gas Station use is also allowable in the zoning district.

CONVENTION CENTER: A *building* or portion thereof designated to accommodate three hundred (300) or more people in assembly.

CONVENTIONAL WELL: A conventional gas well, also known as a traditional well, is a well that produces oil or gas from a conventional geological formation. Conventional geological formations are variable in age, occurring both above and below the Elk Sandstone. While a limited number of such gas wells are capable of producing sufficient quantities of gas without stimulation by hydraulic fracturing, most conventional wells require this stimulation technique due to the reservoir characteristics in Pennsylvania. Stimulation of conventional wells, however, does not typically require the volume of fluids typically required for unconventional wells.

COOP: A small building for housing poultry.

CORRECTIONAL INSTITUTION: Publicly or privately operated facilities housing persons awaiting trial or persons serving a sentence after being found guilty of a criminal offense, halfway houses, homes licensed for juvenile offenders or other facilities where individuals are incarcerated or otherwise required to reside pursuant to court order under the supervision of paid staff and personnel.

COUNCIL: The Council of the Municipality of Monroeville.

COUNTY: The County of Allegheny, Pennsylvania.

COUNTY DEPARTMENT OF ECONOMIC DEVELOPMENT: The designated planning agency of the County of Allegheny, Pennsylvania.

COVERAGE: That percentage of the lot area covered by the building area.

CREMATORIUM: A building fitted with proper appliances for the purpose of the cremation of human and/or animal (Pets) remains and includes everything incidental or ancillary thereto. The heating process that reduces human or animal remains to bone fragments, followed by the processing that reduces bone fragments to unidentifiable dimensions. A *Crematorium* shall only be permitted as an Accessory Use to a Funeral Home.

> *PRIVATE CREMATION:* A cremation procedure during which only one animal's body is present in the cremation unit during the cremation process.
>
> *COMMUNAL CREMATION:* A cremation procedure where multiple animals are cremated together without any form of separation. The commingled remains are not returned to the owners.
>
> *PARTITIONED/INDIVIDUAL/SEPARATED CREMATION:* A cremation procedure during which more than one pet's body is present in the cremation chamber and the cremated remains of specific pets are to be returned. Due to a number of factors and by virtue of

DRAFT

multiple pets being cremated within the same unit at the same time, active commingling of cremated remains will occur.

COMMINGLING: Mixing of cremated animal remains.

CUL-DE-SAC: A street with no outlet, particularly one with a circle for turning around at the end.

CUMULATIVE SUBSTANTIAL DAMAGE: Flood related damages sustained by a structure on two separate occasions during a 10-year period for which the cost of repairs at the time of each such flood event, on average, equals or exceeds 25 percent of the market value of the structure before the damages occurred.

CURATIVE AMENDMENT: A process, which allows landowners to challenge a Municipality's zoning ordinance, on the basis that it does not provide for all uses or for a reasonable share or mix of a specific use or uses and suggest a "cure" as an amendment to the zoning ordinance. Refer to section 609.1. "Procedure for Landowner Curative Amendments'" in the Pennsylvania *Municipalities Planning Code*.

DATA CENTER: A data center or data centre is a building, a dedicated space within a building, or a group of buildings used to house computer systems and associated components, such as telecommunications and storage systems.

DAY CARE: See*"Child Care Facility",* a facility, licensed by the Commonwealth of Pennsylvania, located within a building which is not used as a dwelling unit, for the care of children under the age of sixteen (16) for a portion of a twenty-four-hour (24) day.

DAYS: Calendar days.

DAY SPA: A commercial establishment without accommodations, that offers facilities for health and fitness. A resort with invigorating baths, or a place with therapeutic services such as massages, saunas, baths and manicures. Also see: "*Athletic Facility", "Fitness Center", "Gymnasium", "Membership Club", "Recreational Facility", "Sports Facility*".

DECIBEL (Db): A unit for measuring the intensity of a sound /noise and is equal to ten (10) times the logarithm to the base ten (10) of the ratio of the measured sound pressure squared to a reference pressure which is twenty (20) micropascal.

DECK: An outdoor wooden platform enclosed by a low railing, typically, such a platform adjoining a house.

DEMOBILIZATION: Those activities when the drilling has ceased, and the rig equipment and related pad site equipment is dismantled for the purpose of moving off the drill pad site.

DENSITY: The number of dwelling units per acre of site area.

PENNSYLVANIA DEPARTMENT OF TRANSPORTATION (PENNDOT): The Department of Transportation of the Commonwealth of Pennsylvania and authorized representatives.

DEPARTMENT OF ENVIRONMENTAL PROTECTION (DEP): The Commonwealth of Pennsylvania agency responsible for overseeing and administering environmental laws and regulation within the Commonwealth of Pennsylvania.

DEP: The Pennsylvania Department of Environmental Protection ("DEP").

DRAFT

DEPENDENT DWELLING: An accessory dwelling unit attached to a principal one family house, installed and intended solely for the use of elderly parents, or other dependent, close relatives (Granny Flat).

DERRICK: Any portable framework, tower, mast and/or structure which is required or used in connection with drilling or reworking a well for the production of gas.

*DETENTION BASIN: A*n above ground stormwater facility that collects and temporarily stores surface runoff and releases it at a controlled rate.

DETENTION TANK: Detention storage located in underground tanks or vaults designed to provide water quantity control through detention of stormwater runoff.

DEVELOPER: Any present or prospective landowner or agent of such landowner who makes or causes to be made a Development Plan and an application for a planned development.

DEVELOPMENT: Any man-made change to improved or unimproved real estate, including but not limited to the construction, reconstruction, renovation, repair, expansion, or alteration of buildings or other structures; the placement of manufactured homes; streets and other paving; utilities; filling, grading and excavation; mining; dredging; drilling operations; storage of equipment or materials; and the subdivision of land.

DEVELOPMENT PLAN: The provisions of development of a Planned Residential Development, a Planned Nonresidential Development, a plat of subdivision or land development, including all covenants and provisions relating to use, location and bulk of buildings and other structures, intensity of use or density of development, streets, ways and parking facilities, common open space and public facilities. The phrase "provisions of the development plan" when used in this Ordinance shall mean the written and graphic materials referred to in this definition. from the Mpc: "Development plan," the provisions for development, including a planned residential development, a plat of subdivision, all covenants relating to use, location and bulk of buildings and other structures, intensity of use or density of development, streets, ways and parking facilities, common open space and public facilities. The phrase "provisions of the development plan" when used in this act shall mean the written and graphic materials referred to in this definition.

DIAMETER AT BREAST HEIGHT (DBH): Tree D.B.H. is outside bark diameter at breast height. Breast height is defined as four and one half (4.5) feet above the forest floor on the uphill side of the tree. For the purposes of determining breast height, the forest floor includes the leaf-litter layer that may be present but does not include unincorporated woody debris that may rise above the ground line.

DILAPIDATED: Fallen into partial ruin or decay.

DISPOSAL: Includes the storage, collection, disposal or handling of refuse. The incineration, deposition, injection, dumping, spilling, leaking, or placing of solid waste into or on the land or water in a manner that the solid waste or a constituent of the solid waste enters the environment, is emitted into the air or is discharged to the waters of the Commonwealth of Pennsylvania.

DISPOSAL AREA: The part of the site where disposal is occurring or will occur.

DISPOSAL WELL: A non-producing gas well used for the storage of wastewater and other fluids.

DISTRIBUTED ANTENNA SYSTEMS (DAS): A network of spatially separated Antenna sites connected to a common source that provides wireless service within a geographic area or structure. Also See: *"Commercial Communication Antenna"* and "*Wireless Communication Facility".*

DISTRIBUTION CENTER: An establishment engaged in the receipt, storage, and distribution of goods, products, cargo, and materials, including trans-shipment by boat, rail, air, or motor vehicle.

DISTRIBUTION/PROCESSING FACILITY:

1) *NATURAL GAS COMPRESSOR STATION:*
A facility designed and constructed to compress natural gas that originates from an oil and gas well of collection of such wells operating as a midstream facility for the delivery of oil and gas to a transmission pipeline, distribution pipeline, natural gas processing plant or underground storage field, including one or more natural gas compressors, associated buildings, pipes, valves, tanks and other equipment.

2) *NATURAL GAS PROCESSING PLANT:*
A facility designed and constructed to remove materials such as ethane, propane, butane and other constituents or similar substances from natural gas to allow the natural gas to be of such quality as is required or appropriate for transmission or distribution to commercial markets, but not including facilities or equipment that are/is designed and constructed primarily to remove water, water vapor, oil or naturally occurring liquids from natural gas.

3) *GATHERING SYSTEM FACILITY:*
A facility associated with a gathering system or water collection line such as a drip station, vent station, pigging facility, chemical injection station or transfer pump station.

4) *PRODUTION FACILITY:*
A facility related to the production of gas which utilizes motors and/or engines.

DISTURBED AREA: Area of the site where vegetation is removed, structures or paving is removed, or excavation occurs.

DOMESTIC Pet(s): Any animal that has been bred and/or raised to live in human habitation. Including but not limited to dogs and cats.

DOMESTIC WASTE OR HOUSEHOLD WASTE: Solid waste comprised of garbage and rubbish, which normally originates in the residential private household or apartment house.

DRILLING: Any digging or boring activity of a new well or re-working of an existing well to explore, develop or produce oil, gas or other hydrocarbons, or to inject gas, water or any other fluids or substances into the earth.

DRILLING EQUIPMENT: The derrick, together with all parts of and appurtenances to such structure, every piece of apparatus, machinery or equipment used or erected or maintained for use in connection with drilling.

DRIP LINE: An area directly located under the outer circumference of the tree branches. The outermost edge of a roof including eaves, overhangs and gutters.

DRIVE-IN RESTAURANT: A fast-food restaurant characterized by a limited menu primarily catering to drive-in traffic, and where the food is primarily brought to and consumed within a patron's vehicle. An outdoor seating area may be provided.

DRAFT

DRIVE-IN THEATER: A form of cinema structure consisting of a large outdoor movie screen, a projection booth, a concession stand, and a large parking area for automobiles. Within this enclosed area, customers can view movies from the privacy and comfort of their cars.

DRIVE-THRU ESTABLISHMENT: Establishment which offers in-car service or take-out service including, but not limited to, financial institutions, food stores, pharmacies, and restaurants, but not drive-in theaters.

DRIVE-THRU RESTAURANT: A fast-food restaurant characterized by a limited menu and catering to drive-thru traffic, and where the food is primarily brought to and consumed within a patron's vehicle. An outdoor seating area may be provided.

DRIVEWAY: A private area used exclusively for circulation and ingress and egress to a street by the landowner or visitors of the lot. Every entrance or exit used by vehicular traffic to or from properties abutting or connecting to a private or public right-of-way.

DRIVING RANGE: A public or private area operated for the purpose of developing golfing techniques, including miniature golf courses, but excluding golf courses.

DRY CLEANING: The cleansing of fabrics with substantially nonaqueous organic/inorganic solvents.

DUMPSTER (CONSTRUCTION WASTE-TEMPORARY): A unit designed for the deposit of rubbish at sites related to the clean-out, building, construction, repair, renovation or demolition of commercial or residential structures. The unit is usually located, on a temporary basis, on property, a driveway, or street abutting the site and is transportable to and from the site for purposes of disposal of its contents by means of a transport vehicle. A construction waste dumpster exceeds 96 gallons in size and shall not exceed 40 cubic yards in size. A construction waste dumpster includes waste disposal bags ("Bagsters"), regardless of size.

DUPLEX: See: *"Two-Family House".*

DWELLING UNIT: One (1) or more living or sleeping rooms with cooking and sanitary facilities for one (1) person or a single family.

EASEMENT: Authorization by a property owner for the use by another, and for a specified purpose, of any designated part of his property.

EDGE OF WELL PAD: The edge of the disturbed surface area associated with drilling operations.

EDUCATIONAL INSTITUTION: Also see: *"School", "Vocational School."* A college or university, authorized by the Commonwealth of Pennsylvania as such to award associate, baccalaureate or higher degrees, including, principal uses for classrooms, libraries, auditoriums, gymnasiums, stadiums, administrative offices, dormitories and dining facilities, maintenance and operating facilities as well as ancillary uses, such as research facilities, retail services and businesses that support student, faculty and staff needs.

EMERGENCY: a condition that (I) constitutes a clear and immediate danger to the health, welfare, or safety of the public, or (2) has caused or is likely to cause facilities in the rights-of-way to be unusable and result in loss of the services provided.

ENGINEER: A professional engineer registered by the Commonwealth of Pennsylvania. See *"Registered Professional".*

DRAFT

ENVIRONMENTAL IMPACT ASSESSMENT: An assessment of the impact of a use on the (1) natural environment, i.e., geology, topography, soils, hydrology, vegetation, wildlife, wetlands, and air quality; and (2) the cultural environment, i.e., lot use, utilities, traffic, population, economics, services, historic assets, and general character of the neighborhood.

EROSION: The detachment and movement of soil or rock fragments, or the wearing away of the surface of the land by wind, water, ice, or gravity.

ESCORT: A person who, for consideration, agrees or offers to act as a companion, guide, or date for another person, or who agrees or offers to privately model lingerie or to privately perform a striptease for another person.

ESSENTIALLY DRY SPACE: A space which will remain dry during flooding, except for the passage of some water vapor or minor seepage; the structure is substantially impermeable to the passage of water.

EXISTING MANUFACTURED HOME PARK OR SUBDIVISION: A manufactured home park or subdivision for which the construction of facilities for servicing the lots on which the manufactured homes are to be affixed (including, at a minimum, the installation of utilities, the construction of streets, and either final site grading or the pouring of concrete pads) is completed before the effective date of the floodplain management regulations adopted by a community.

EXPANSION TO AN EXISTING MANUFACTURED HOME PARK OR SUBDIVISION: The preparation of additional sites by the construction of facilities for servicing the lots on which the manufactured homes are to be affixed (including the installation of utilities, the construction of streets, and either final site grading or the pouring of concrete pads).

EXPLORATION: Temporary geologic or geophysical activities such as drilling, in context with the definition set forth in this ordinance, including seismic surveys related to the search for natural gas or other sub-surface hydrocarbons.

EXTERIOR WOOD BURNING STOVE: A wood-fired boiler, stove, furnace, chiminea, patio warmer, or other portable wood-burning device used for outdoor recreation and/or heating.

EXTERMINATION: The control and elimination of vectors by eliminating their harborage places, by removing or making inaccessible materials that may serve as their food, by poisoning, spraying, fumigating, fogging, larviciding, trapping or by any other recognized and legal vector-control elimination methods approved by the local or state authority having such administrative authority.

EXTRACTION OF MINERALS: Any use consisting of the mining and extraction of coal or other minerals.

FAA: Federal Aviation Administration of the United States Department of Transportation.

FACILITY: Land, structures and other appurtenances or improvements where municipal waste disposal or processing is permitted or takes place. The primary building(s), support structure(s) and associated appurtenances designed, constructed, and maintained to operate a natural gas well pad, compressor station or processing plant.

FACILITY OPERATOR: Any person or entity partnership, company, corporation and its subcontractors and agents who has a desire to install and/or operate a natural gas compressor station.

DRAFT

FACILITY WORK: The construction of, alteration, improvement, upgrade or expansion to a natural gas compressor station or processing plant that results in an increase in the gross floor area of the primary building and the paved area of the pad area which, in combination, totals 2,000 square feet or more. The term "facility work" shall include the initial construction of the facility but shall not include typical maintenance to or operation of an existing facility. Any construction of, alteration, improvement, upgrade or expansion to a facility that results in a less than square foot addition shall not be considered facility work.

FAMILY: Either an individual, or two (2) or more persons related by blood or marriage or adoption, or a group of not more than five (5) persons not so related (not counting servants) occupying a premise and living as a single housekeeping unit distinguished from a group occupying a boarding house, lodging home, club, fraternity, or hotel. Trant and Wratcher to confirm consistency with case law

FARM: Any lot or group of contiguous lots under single ownership used for agriculture, as defined by this Ordinance.

FARMERS/GROWERS MARKET: A retail establishment at which fruits, vegetables, breads, eggs, milk, cheese, meat, flowers, and the like are sold by persons who typically grow, harvest, or process such items from their farm or agricultural operation.

FARM ANIMALS: See also Livestock: Any animal that has been bred and/or raised to live in human habitation, not necessarily as an asset, is dependent on people for food and shelter, and is over (200) pounds. Including, but not limited to cows, miniature cows, pigs, potbelly pigs, goats, shetland ponies, ostriches, and emus.

FCC: Federal Communications Commission.

FEMA: Federal Emergency Management Agency.

FENCE: a barrier, railing, or other upright structure, typically of wood or wire, enclosing an area of ground to mark a boundary, control access, or prevent escape.

FILL: Earth, gravel, sand or other materials of any composition whatsoever placed or deposited by humans.

FINANCE, INSURANCE, AND REAL ESTATE OFFICE: Establishments such as banks and savings and loans, credit agencies, investment companies, brokers and dealers of securities and commodities, security and commodity exchanges, insurance agents, lesser, lessees, buyers, sellers, agents and developers of real estate.

FINAL CLOSURE: The date after which no further treatment, maintenance or other action is or will be necessary at a municipal waste processing or disposal facility to ensure compliance with this Ordinance.

FINANCIAL SECURITY: (Refer to SALDO for "Guarantee of Improvements") Surety, in a form acceptable to the Municipal Solicitor, in the form of a certified check or irrevocable letter of credit and restrictive or escrow account or set-aside agreement from a federal or commonwealth-chartered lending institution, or a corporate performance bond or a labor-and-material payment bond from a surety company authorized to conduct business in the commonwealth, which may be classified as the following:

1) *IMPROVEMENT SECURITY:* A financial security which guarantees the satisfactory completion of improvements required by this chapter.

DRAFT

2) *MAINTENANCE SECURITY:* A financial security which guarantees the structural functioning and integrity of improvements required by this chapter for a specified period after their completion and acceptance by the Municipality.

FIRING RANGE: See "Gun Range"

FITNESS CENTER: A health, recreational, and social facility geared towards exercise, sports, and other physical activities. A Fitness Center may also accommodate outdoor activities with features such as a running track, swimming pool and sport playing fields. Also see: "*Athletic Facility", "Day Spa", "Gymnasium", "Membership Club", "Recreational Facility", "Sports Facility".*

FLAG: Any fabric containing distinctive colors, patterns, or symbols, used as a symbol of the United States of America, the Commonwealth of Pennsylvania, the local Municipality or non-profit organizations or any other organization. A flag is not a sign.

FLAG LOT: A parcel of land shaped like a flag, with a narrow strip providing access to a public street or waterway and the bulk of the property containing no frontage. When planned, it is a way to maximize property density without having to install additional streets. Front and side Yard requirements ~~only~~ do not pertain to the portion of property that connects to the right of way. Front, Side and Rear Yard requirements pertain to the Buildable Area of the property that does not connect to the right of Way. what is minimum width of "flag?"--25'???

FLOOD: A temporary inundation of normally dry land areas.

FLOOD FRINGE DISTRICT: That area of the one hundred (100) year floodplain not included in the Floodway District. The basis for the outermost boundary of this District shall be the one hundred (100) year flood elevations contained in the flood profiles of the Flood Insurance Study.

FLOOD INSURANCE RATE MAP (FIRM): The official map on which the Federal Emergency Management Agency has delineated both the areas of special flood hazards and the risk premium zones applicable to the community.

FLOOD INSURANCE STUDY (FIS): The official report provided by the Federal Emergency Management Agency that includes flood profiles, the Flood Insurance Rate Map, the Flood Boundary and Floodway Map, and the water surface elevation of the base flood.

FLOODPLAIN AREA: A relatively flat or low land area which is subject to partial or complete inundation from an adjoining or nearby stream, river or watercourse; and/or any area subject to the unusual and rapid accumulation of surface waters from any source.

FLOODPLAIN DISTRICT: Floodplain areas for which no detailed flood profiles or elevations are provided, but where a one hundred (100) year floodplain boundary has been approximated. Such areas are shown on the Flood Boundary and Floodway Map of the Flood Insurance Study.

FLOOD INSURANCE STUDY: A study prepared by the Federal Emergency Management Agency for the National Flood Insurance Program, which includes Flood Insurance Rate Maps.

FLOODPROOFING: Any combination of structural and non-structural additions, changes, or adjustments to structures which reduce or eliminate flood damage to real estate or improved real property, water and sanitary facilities, structures, and their contents.

DRAFT

FLOODWAY: The channel of a river or other watercourse and the adjacent land areas that must be reserved in order to discharge the base flood without cumulatively increasing the water surface elevation more than one foot.

FLOODWAY DISTRICT: That portion of a floodplain delineated for regulation by this Ordinance which must be reserved to discharge the waters of the one hundred (100) year flood without causing more than a one (1) foot rise in flood heights. The areas included in this District are specifically defined on Tables 1 through 6 of the Flood Insurance Study.

FLOOR AREA:

1) The number of square feet of the total floor area bounded by the exterior faces of the building (Gross Floor Area);

2) In a dwelling, the sum of the horizontal areas of all rooms used for habitation, but not including cellars, attics, unheated rooms, nor rooms without either a skylight or window; or

3) In a store, shop, restaurant, club or funeral home, the sum of the horizontal areas of all space to which the customer has access and excluding storage, office, other preparation, or administrative spaces (Net Floor Area).

FLOOR AREA RATIO (FAR): The ratio obtained when the gross floor area minus unoccupied basement area is divided by the total lot area.

FLOWBACK: The process of flowing a completed/fractured gas well for the purpose of recovering water and residual sand, or other fluids or substances from the gas stream prior to sending the gas to an outside source.

FOOD PROCESSING ESTABLISHMENT: An establishment in which food is processed or otherwise prepared for eventual human consumption but not consumed on the premises.

FOOD SERVICE ESTABLISHMENT: An area with seats and/or tables in which prepared food is served for human consumption.

FOOD TRUCK: A mobile kitchen that serves food beverages from an enclosed, self-contained, motorized vehicle or is towed by an operable motorized vehicle.

FORESTER: A person employed as a forester by the Commonwealth of Pennsylvania's Department of Environmental Protection, Bureau of Forestry, or a person listed on said Bureau of Forestry's Register of Consulting Foresters as being a graduate of a forestry school accredited by the Society of American Foresters and employed full-time as a private forestry consultant

FORESTRY: The management of forests and timberlands when practiced in accordance with accepted silvicultural principles, through developing, cultivating, harvesting, transporting and selling trees for purposes, which does not involve any land development.

FORESTRY ACTIVITIES: The management, cultivating, maintaining, and harvesting of timber from a site. Forestry activities do not include the production or processing of lumber mills or similar activities/uses of timber, whether grown on site or off site.

FREIGHT TERMINAL: A terminal with the capability of handling a large variety of goods involving various forms of transportation and providing multimodal shipping capabilities, such as rail to truck and truck to air.

DRAFT

FRACTURE or FRACTURING: The process of injecting water, customized fluids, sand, steam, gas or other agents into a gas well under pressure to improve gas recovery of a rock formation.

FRESHWATER: Any water obtained from a potable water source such as a hydrant, stream, lake, eater well, spring or other source that has not been treated or utilized in commercial or industrial operations. Freshwater does not include exploration and production fluids such as produced water, flowback fluids or re-use water.

FRESHWATER FRACTURE PIT: A pit used for the collection and storage of fresh water for the purpose of fracture stimulation of gas wells.

FRONTAGE: The distance between the intersection of the side lot lines and the front lot line as measured along the front lot line.

FRONT YARD: See: "*YARD, FRONT*".

FRONT YARD DEPTH: The prescribed minimum open space extending across the entire width of the lot between the front line of building and street right of way.

FRONT YARD LINE: The front yard line bounds the front yard and is parallel to the front lot line or structure.

FUEL SERVICE AND/OR CHARGING STATION: A building or structure and one (1) or more pump islands / charging stations, each consisting of one (1) or more motor vehicle fuel pumps or charging stations, which may include the sale of food and personal items, oil, antifreeze, gasoline additives, propane, natural gas, small accessory items required for the operation of motor-vehicles, including car washing facilities. However, the fuel service and/or charging station shall not include the installation, repair or provision of exhaust systems, electrical systems, transmissions, brakes, radiators, tires, rust proofing, motor vehicle diagnostics, lubrication, major and minor mechanical and/or body repairs or similar services, towing service or motor vehicle rental/leasing.

FUNERAL HOME: A *building* used for the preparation of the deceased for burial and the display of the deceased and rituals connected therewith before burial or cremation.

GAME OF CHANCE: a game in which the outcome is determined by chance rather than by the skill of its players, such as roulette.

GAME OF SKILL: any game, contest, or amusement of any description in which the designating element of the outcome is the judgment, skill, or deftness of the participant in the contest and not chance. In a game of skill, outcome is determined mainly by mental or physical skill, rather than by pure chance

GARBAGE: Solid waste derived from animal, grain, fruit, or vegetable matter that is capable of being decomposed by microorganisms with sufficient rapidity to cause such nuisances as odors, gases, or vectors. Putrescible animal or vegetable waste.

GARDEN APARTMENT: A multiple family residential structure containing three (3) or more dwelling units having a height no greater than three (3) stories.

GAS: Any fluid, either combustible or non-combustible, which is produced in a natural state from the earth and which maintains a gaseous or rarified state.

DRAFT

GAS STATION: A premises providing fuel and minor accessories and services to automobiles, but not including major overhaul, spray painting, recapping of tires, or auto wrecking.

GAS WELL: Any well drilled, to be drilled or used for the intended or actual production of natural gas.

GOLF COURSE: A recreational facility, public or private, whose primary purpose is the sport of golf and may include associated accessory uses, included but not limited to, as driving ranges, putting courses, club house, pro shop, swimming pools, tennis court, and restaurant.

GOVERNING BODY: The Council, Municipality of Monroeville and Allegheny County, Pennsylvania.

GRADE: The average level of the finished surface of the ground adjacent to the exterior walls of the building, structure, accessory structure or sign.

GRADE, EXISTING: The vertical elevation of the ground prior to excavation or filling.

GRADE, FINISHED: The final grade of the site that conforms to the approved plan.

GRANNY FLAT: a part of a house or accessory structure made into self-contained accommodations suitable for an elderly relative.

GRAPHIC ELEMENT: Any display of fabric which moves with the movement of wind and which may or may not advertise a product, service or entertainment.

GREEN BUILDING STANDARDS: Buildings designed in accordance with the green plans as established by the Pennsylvania Governors Green Government Council established March 25, 1998, and any recommendations, regulations or requirements promulgated hereafter.

GREENHOUSE: A building whose roof and or sides are made largely of glass or other transparent or translucent material and in which the temperature and humidity can be regulated for the cultivation of plants for their subsequent sale.

GROSS FLOOR AREA: See: *"Floor Area".*

GROSS LEASABLE AREA (GLA): The total building area for tenant occupancy and exclusive use, including any basements, mezzanines, or upper floors, expressed in square feet and measured from the center line of joint partitions and from outside wall faces. Gross leasable area is that area of a building for which a tenant pays rent.

GROSS SQUARE FOOTAGE: See: *"Floor Area".*

GROSS SURFACE AREA: (In reference for Signs) The entire area within a single continuous perimeter enclosing the extreme limits of writing, representation, emblem or figure or similar character together with any frame or other material or color forming an integral part of the display or used to differentiate sign from the background against which it is placed; excluding necessary supports or uprights upon which such sign is placed. For signs utilizing individual letters or figures or characters mounted directly on the wall or face of a structure, the gross surface area shall be the entire area within a single continuous perimeter enclosing the extreme limits of the writing, representation, or other communication material.

GROUND-MOUNTED SYSTEM: A solar photovoltaic system mounted on a structure, pole or series of poles constructed specifically to support the photovoltaic system and not attached to any other structure.

DRAFT

GROUNDWATER: Water in that portion of the generally recognized hydrologic cycle which occupies the pore spaces and fractures of saturated subsurface materials. Groundwater often supplies wells and springs and is often withdrawn for domestic, agricultural, municipal, industrial, and other beneficial uses.

GROUP HOME: Also See: *"Assisted Living Facility", "Hospice", "Nursing Home Facility", "Personal Care Home Facility", "Skilled Nursing Facility."* A home where up to 8 unrelated people in need of care, support, or supervision can live together, such as those who are elderly or require special needs. The terms shall not include hospitals, psychiatric hospitals, or alcohol and drug abuse rehabilitation centers. Trant and Wratcher to approve this definition

GRUBBING: To clear out underbrush, roots and stumps by digging.

GUN RANGE, INDOOR/OUTDOOR: An indoor and/or outdoor facility used for shooting and/or firing of guns, rifles and other similar weapons on a range(s) to an intended target of any type. An indoor/outdoor facility that may or may not include a clubhouse but which includes facilities for one or more of the following activities: archers, target shooting, skeet or trap shooting, marksmanship and similar activities.

GYMNASIUM: A building containing space and equipment for various indoor sports activities and usually including spectator accommodations, locker and shower rooms, offices, classrooms, and a swimming pool. Also see: "*Athletic Facility", "Day Spa", "Fitness Center", "Membership Club", "Recreational Facility", "Sports Facility".*

HAM RADIO: Also known as Amateur Radio, is the use of radio frequency spectrum for purposes of non-commercial exchange of messages, wireless experimentation, self-training, private recreation, radio-sport, contesting, and emergency communication.

HARBORAGE: Any place where *vectors* can live, nest or seek shelter.

HARVEST AREA: The location on the site where timber harvesting occurs.

HAULER OR PRIVATE COLLECTOR: Any person, firm, co partnership, association or corporation who has been licensed by the Municipality or its designated representative to collect, transport, and dispose of refuse for a fee as herein prescribed.

HAZARDOUS MATERIAL: Materials or substances as listed by The U.S. EPA having corrosiveness, reactivity and toxicity or other injurious properties, including any of the following materials or substances: acetone, ammonia, benzene, calcium carbide, carbon disulfide, celluloid, chlorine, hydrochloric acid, hydrocyanic acid, magnesium, nitric acid, nitric oxides, petroleum products, phosphorus, potassium, sodium, sulphur, sulphur products, pesticides, insecticides, fungicides, and all poisons, flammable gasses and radioactive substances.

HAZARDOUS SUBSTANCE: Any of the following materials or substances: acetone, ammonia, benzene, calcium carbide, carbon disulfide, celluloid, chlorine, hydrochloric acid, hydrocyanic acid, magnesium, nitric acid, nitric oxides, petroleum products, phosphorus, potassium, sodium, sulfur, sulfur products, pesticides, insecticides, fungicides, and all poisons, flammable gasses and radioactive substances.

HAZARDOUS WASTE: Garbage, refuse or sludge from an industrial or other waste water treatment plant; sludge from a water supply treatment plant or air pollution control facility; and other discarded material, including solid, liquid, semisolid or contained gaseous material resulting from municipal,

DRAFT

commercial, industrial, institutional, mining or agricultural operations, and from community activities; or combination of the above. The term does not include the Coal Refuse Disposal Control Act (52 P.S. Section 30.51-30.101). The term does not include treatment of sludge from coal mine drainage treatment plants, disposal of which is being carried on under and in compliance with a valid permit issued under The Clean Streams Law (35 P.S. Section 691.1 - 691.1001). The term does not include solid or dissolved material in irrigation return flows or industrial discharges which are point sources subject to permits under Section 402 of the Federal Water Pollution Control Act (33 U.S.C.A. Section 1341), or source, special nuclear or byproduct material as defined by the Atomic Energy Act of 1954, (42 U.S.C.A. Section 2011-2284), which because of its quantity, concentration or physical, chemical or infectious characteristics may do one of the following:

1) Cause or significantly contribute to an increase in mortality or increase morbidity in either an individual or total population; or

2) Pose a substantial present or potential hazard to human health or the environment when improperly treated, stored, transported, disposed of or otherwise managed.

~~*HOBBY FARM:* A farm, as defined herein, located on a tract, which has less than the ten (10) acres required by this Ordinance for a farm, but which meets the minimum acreage requirements for a Hobby Farm, which is accessory to a single-family dwelling, and which is for the personal use and enjoyment of the residents and does not constitute the principal economic activity of the residents~~. **Relocated alphabetically**

HEALTH SPA: Also see: *"Athletic Facility", "Day Spa", "Fitness Center", "Gymnasium", "Membership Club", "Recreational Facility", "Sports Facility".* A commercial recreation and entertainment facility or private club which has as a principal use a gymnasium, swimming pool or other sports facility and which may offer massages, whirlpool baths, steam rooms, saunas or medical facilities as accessory uses to the principal use

HEAVY EQUIPMENT: Self-propelled, self-powered or pull-type equipment and machinery, including engines, weighing 5000 pounds or more, primarily employed for construction, industrial, maritime, mining and forestry uses, as such terms are commonly used and understood as a usage of trade. The term "heavy equipment" shall not include: motor vehicles requiring registration and certificates of title, or farm machinery, equipment and implements sold or leased pursuant to dealer agreements with suppliers. Heavy-duty vehicles, specially designed for executing construction tasks, most frequently, ones involving earthwork operations. They are also known as, construction equipment, construction plant, earth movers, engineering vehicles, or simply equipment. They usually comprise five equipment systems: implement, traction, structure, power train, control, and information.

HEIGHT: Also see: *"Building Height"*

1) The vertical distance from grade at the front wall of a structure to the highest point of the coping of a flat roof or to the deck line of a mansard roof, or to the mean height level between eaves and ridge for gable, hip or gambrel roofs.

2) For the purpose of determining the height limits in the *Airport Hazard* Overlay Zone set forth in this Ordinance and shown on the zoning map, the datum shall be mean sea level elevation unless otherwise specified.

HEIGHT OF A COMMERCIAL COMMUNICATION TOWER: The vertical distance measured from the ground level, including any base pad, to the highest point on a Commercial Communication Tower, including antennae mounted on the tower and any other appurtenances.

HELIPAD: A place for helicopters to land and takeoff.

DRAFT

HELIPORT: An area, either at ground level or elevated on a structure, licensed by the federal government or an appropriate state agency, approved for the loading, landing, and takeoff of helicopters and including auxiliary facilities, such as parking, waiting room, fueling, defueling and maintenance equipment.

HELISTOP: The same as "Heliport" except that no fueling, defueling, maintenance, repairs or storage of helicopters is permitted.

HIGHEST ADJACENT GRADE: The highest natural elevation of the ground surface prior to construction next to the proposed walls of a structure.

HISTORICAL MARKER / PLAQUE / TABLET / SIGN: A marker, plaque, tablet, or sign that memorializes an event, person, building or structure of historical importance.

HISTORIC STRUCTURE: Any structure that is: List the historic structures in Monoreviile—contact Bruce Walker Old Stone Church, McGinley House, McCully Log House, McGregor Stone Bridge

1) Listed individually in the National Register of Historic Places (a listing maintained by the Department of Interior) or preliminarily determined by the Secretary of the Interior as meeting the requirements for individual listing on the National Register;

2) Certified or preliminarily determined by the Secretary of the Interior as contributing to the historical significance of a registered historic district or a district preliminarily determined by the Secretary to qualify as a registered historic district;

3) Individually listed on a state inventory of historic places in states with historic preservation programs which have been approved by the Secretary of Interior; or

4) Individually listed on a local inventory of historic places in communities with historic preservation programs that have been certified either:

    a) By an approved state program as determined by the Secretary of the Interior or;

    b) Directly by the Secretary of the Interior in states without approved programs.

HOBBY FARM: A farm, as defined herein, located on a tract, which has less than the ten (10) acres required by this Ordinance for a farm, but which meets the minimum acreage requirements for a Hobby Farm, which is accessory to a single-family dwelling, and which is for the personal use and enjoyment of the residents and does not constitute the principal economic activity of the residents.

HOME OCCUPATION: Any occupation or business use, full-time or part-time, conducted within a dwelling or an accessory structure, or both, by a resident of the property.

HOOKAH LOUNGE: an establishment where patrons may share shisha (flavored tobacco) from a communal hookah. Also SEE: CIGAR BAR / LOUNGE

DRAFT

HOSPICE: Also See: *"Assisted Living Facility", "Continuing Care Facility", "Group Home", "Nursing Home Facility", "Personal Care Home Facility", "Skilled Nursing Facility".* A building or portion thereof, in which terminally ill persons live in order to receive appropriate hospice services, as defined in current Commonwealth of Pennsylvania licensure requirements. The terms shall not include hospitals, psychiatric hospitals, or alcohol and drug abuse rehabilitation centers.

HOSPITAL: An institution providing primary health services and medical and or surgical care to persons, primarily inpatients, suffering from illness, disease, injury, deformity and other abnormal physical or mental conditions and including, as an integral part of the institution, related facilities such as laboratories, outpatient facilities, training facilities, medical offices and staff residences, as defined in current Commonwealth of Pennsylvania licensure requirements.

HOTEL: A structure or structures designed for occupancy primarily as the temporary abiding place of individuals who are lodged with or without meals, including auto courts, motels, motor hotels, motor lodges, tourist courts and the like, in which structure or a group or structures:

1) There are more than six (6) living or sleeping room units;

2) All of the first floor area devoted to residential use is in living or sleeping units, each with a private bathroom and none with cooking facilities, except for quarters for the resident manager or proprietor;

3) The major portion of the floor area is devoted to living quarters, but incidental business may be conducted; or

4) There may be meeting rooms, common dining facilities, swimming pools, tennis courts, and similarly ancillary recreational uses, as accessory uses or structures incidental to the hotel operation.

HOUSING FOR THE ELDERLY: Also see: *"Senior Housing".* A multiple family apartment structure designed for and operated for occupancy by elderly families and individuals, sixty years of age or older, and conforming to all requirements of Federal, State or Local laws and regulations pertaining to housing for the elderly.

HVAC: Equipment used to heat, cool, or ventilate a structure.

HYDRONIC HEATER: A fuel-burning device that is located outside of the main structure which it is intended to heat and may be equipped with a heat storage unit, and is designed to burn wood to heat water or a water/antifreeze mixture and distribute the heated fluid via piping to the main structure. Also known as an outdoor wood furnace, outdoor wood-fired boiler or outdoor wood-fired hydronic heater.

IBC: International Building Code

IDENTIFIED FLOOD PLAIN AREA: This term is an umbrella term that includes all of the areas within which the community has selected to enforce floodplain regulations. It will always include the area identified as the Special Flood Hazard Area on the Flood Insurance Rate Maps and Flood Insurance Study, but may include additional areas identified by the community. See Section 804 for the specifics on what areas the community has included in the Identified Floodplain Area.

IEBC: International Existing Building Code

IFC: International Fire Code

DRAFT

IFGC: International Fuel Gas Code

IMC: International Mechanical Code

IMPERVIOUS SURFACE: Those surfaces which do not absorb water. They consist of all buildings, parking lots, streets, sidewalks, and any areas of concrete or asphalt or nonabsorbent material. In the case of lumberyards, areas of stored lumber constitute impervious surfaces. A surface area, which has been compacted or covered with a layer of material so that it is resistant to infiltration by water. It includes semi pervious surfaces such as compacted clayey soils, as well as most conventionally surfaced streets, roofs, sidewalks, parking lots, and other similar surfaces. The Municipal Engineer shall have the final determination as to what constitutes an impervious surface. Net increase of impervious surface refers to the difference between the existing impervious coverage and the total impervious surface proposed.

IMPLEMENTABLE COMPREHENSIVE PLAN: A "Multimunicipal Planning Playbook" between Churchill Borough, Municipality of Monroeville and Wilkins Township. Adopted by resolution 18-16 on March 23, 2018.

INCINERATOR: A device used to burn waste substances and in which all the combustion factors, temperature, retention time, turbulence, and combustion air can be controlled.

INDUSTRIAL CENTER/PARK: An area of land occupied by a group of three or more industrial uses arranged and constructed in accordance with a plan, each use contained on a separate lot having direct access to a public road.

INDUSTRIALIZED HOME: Any structure designed primarily for residential occupancy which is wholly or in substantial part made, fabricated, formed or assembled in manufacturing facilities for installation, or assembly and installation, on the building site; however, for the purposes of this act, that category of housing units defined as mobile homes is excluded from this definition. [Act of May. 11, 1972, P.L. 286, No. 70]

INJECTION WELL: – A well used to place fluid underground into porous geologic formations. These underground formations may range from deep sandstone or limestone, to a shallow soil layer. Injected fluids may include water, wastewater, brine (salt water), or water mixed with chemicals. Also see: *"Oil and Gas."*

INSTITUTIONAL ESTABLISHMENT: An establishment engaged in service, including but not limited to hospitals, nursing home facility, orphanages, schools and universities.

INTERCONNECTION: The technical and practical link between the solar generator and the grid providing electricity to the greater community.

INTERMEDIATE-CARE FACILITY: A facility that provides nursing care and related medical or other personal health services to human patients on a planned program of care and administrative management, supervised on a continuous twenty-four-hour basis in an institutional setting, as defined in current state licensure requirements.

INVASIVE: Plants / animals which aggressively spread and displace beneficial vegetation.

IPC: International Plumbing Code

IPMC: International Property Maintenance Code

DRAFT

IRC: International Residential Code

IZC: International Zoning Code

JOINT COMPREHENSIVE PLAN: See: *"Implementable Comprehensive Plan".*

JUNK: Any scrap, waste, reclaimable material or debris, whether or not stored, for sale or in the process of being dismantled, destroyed, processed, salvaged, stored, baled, disposed, or other use or disposition, including, but not limited to: unregistered, inoperable vehicles; tires; vehicle parts; equipment; paper; rugs; metal; glass; household appliances; machinery, and building materials.

JUNK YARD: See *"Salvage Yard".*

KENNEL: An establishment where four (4) or more domestic pets that are six (6) months or older are kept, bred, trained or boarded at any one time, whether for profit or not. A kennel is ***NOT*** a *no-impact home-based business* and is not an accessory use to a residential dwelling unless specifically permitted by this ordinance.

KILOWATT (kW): A unit of electrical power equal to 1,000 Watts, which constitutes the basic unit of electrical demand. A watt is a metric measurement of power (not energy) and is the rate (not the duration) at which electricity is used. 1,000 kW is equal to 1 megawatt (MW).

LAND DEVELOPMENT: Any of the following activities:

1) The improvement of one (1) lot or two (2) or more contiguous lots, tracts, or parcels of land for any purpose involving:

    a) A group of two (2) or more residential or nonresidential buildings, whether proposed initially or cumulatively, or a single nonresidential *building* on a lot or lots regardless of the number of occupants or tenure; or

    b) The division or allocation of land or space, whether initially or cumulatively, between or among two (2) or more existing or prospective occupants by means of, or for the purpose of streets, common areas, leaseholds, condominiums, building groups or other features; or

2) A subdivision of land.

3) Land Development shall not include:

    a) The conversion of an existing single-family detached dwelling or single-family semi-detached dwelling into not more than three (3) residential units, unless such units are intended to be a condominium;

    b) The addition or conversion of buildings or rides within the confines of an enterprise which would be considered an amusement park. For purposes of this sub clause, an amusement park is defined as a tract or area used principally as a location for permanent amusement. This exclusion shall not apply to newly acquired acreage by an amusement park until initial plans for the expanded area have been approved; and

    c) The construction of public infrastructure on behalf of a public entity.

DRAFT

LANDFILL: See *"Municipal Waste Landfill".*

LANDING AREA: A designated location on land where the harvested timber, including logs, pulpwood, or firewood, is assembled for transportation off site to processing facilities.

LANDOWNER: The legal or beneficial owner or owners of land, including the holder of an option or contract to purchase (whether or not such option or contract is subject to any condition), a lessee if he is authorized under the lease to exercise the right of the landowner, or other person having a proprietary interest in land.

LANDSCAPE ARCHITECT: A Landscape Architect registered by the Commonwealth of Pennsylvania. See *"Registered Professional".*

LANDSCAPE PLAN: A landscape plan prepared by a landscape architect identifying each tree and shrub by size, type and scientific name, ball and burlap or bare root, and location, together with a planting diagram and such other diagrams or reports necessary to show method of planting, staking and mulching, grass seeding specifications and mixtures and existing trees over six inches in diameter at breast height.

LAUNDROMAT: An establishment providing washing, drying, or dry-cleaning machines on the premises for rental use to the general public.

LED: Light emitting diode.

LIFT COMPRESSOR: A device that raises the pressure of a compressible fluid (gas) in order to lift gas from the well.

LIGHT MANUFACTURING: The processing and fabrication of certain materials and products where no process involved will produce noise, vibration, air pollution, fire hazard, or noxious emission which will disturb or endanger neighboring properties. Light manufacturing includes, but not limited to, the production of the following goods: home appliances; electrical instruments; office machines; precision instruments; electronic devices; timepieces; jewelry; optical goods; musical instruments; novelties; wood products; printed material; lithographic plates; type composition; machine tools; dies and gauges; ceramics; apparel; lightweight non-ferrous metal castings; film processing; light sheet metal products; plastic goods; pharmaceutical goods; and food products but not animal slaughtering, curing, nor rendering of fats.

LIMITED OFFICE: Offices located within a structure having a floor area of less than four thousand (4,000) square feet.

LINE COMPRESSOR: A device that raises the pressure of a compressible fluid (gas) in order for the gas to be transported through a pipeline.

LIVE-WORK UNIT: A commercial use, such as a shop, studio, office, cafe, deli, personal service establishment or other place of business, in combination with a dwelling unit or units located above such place of business. A person or persons other than the proprietor of the business may occupy a live-work unit. The dwelling should have the appearance of a townhouse.

LIVESTOCK: farm animals regarded as an asset.

LOADING BERTH: An off-street loading berth, on the same lot with a building, or contiguous to a group of buildings, for the temporary parking of a commercial vehicle while loading or unloading merchandise or materials.

DRAFT

LOCAL RESTAURANT: A restaurant other than a drive-in restaurant having a floor area not greater than three thousand (3,000) square feet.

LOCAL RETAIL SHOP: Retail stores and personal service shops which cater to the day to day needs of nearby residents and which can be located in close proximity to residential neighborhoods without an adverse impact from undue vehicular congestion, excessive noise or other objectionable influences. Such shops and stores include drug stores, beauty salons, barber shops, dry cleaning and laundry pickup facilities having a gross floor area of less than three thousand (3,000) square feet, and grocery stores of less than eight thousand (8,000) square feet of gross floor area.

LOT: A designed parcel, tract or area of land established by a plat or otherwise permitted by law and to be used, developed or built upon as a unit.

LOT, CORNER: A lot at the junction of two (2) or more intersecting streets and having frontage on two (2) or more such streets. Lots that abut on more than one street shall provide the required front yard along every public or private street. The remaining yards shall be considered side yards. SEE DIAGRAM

LOT, INTERIOR: A lot other than a corner lot or through lot. SEE DIAGRAM

LOT, THROUGH: A lot having frontage on two (2) parallel or approximately parallel streets and which is not a corner lot. SEE DIAGRAM

LOT AREA: The area contained within the lot lines of the individual parcels of land as shown on a subdivision or land development plan, excluding the area within the street right-of-way or easement for overhead utility lines but including any easements, expressed in terms of acres or square feet.

LOT DEPTH: A mean horizontal distance between the front and rear lot lines.

LOT FRONTAGE: The horizontal distance between the side lot lines measured along the front lot line.

LOT LINE: A line bounding a lot which divides one (1) lot from another or from a street or any other public or private space.

LOT LINE, FRONT: A lot line or lines which separates a lot from a public street or streets.

LOT LINE, REAR: The lot line which is parallel to and most distant from the front lot line.

LOT LINE, SIDE: Any lot line other than a front or rear lot line.

LOT OF RECORD: Any lot which individually, or as a part of a subdivision, has been recorded in the Department of Real Estate of Allegheny County or its successor agency.

LOT, WIDTH OF: The distance between the side lines of the zoning lot measured at the shortest distance at or between the front and rear building lines as determined by the prescribed front and rear yard requirements.

LOT, ZONING: A parcel of land, fronting on a street, which is or may be occupied by a main structure or a unit group of buildings with accessory uses and structures and the open spaces required under this ordinance, including easement areas if any, but not including any public or private street or alley.

DRAFT

LOWEST FLOOR: The lowest floor of the lowest fully enclosed area (including basement): An unfinished, flood resistant partially enclosed area, used solely for parking of vehicles, building access, and incidental storage, in an area other than a basement area is not considered the lowest floor of a building, provided that such space is not designed and built so that the structure is in violation of the applicable non-elevation design requirements of this Ordinance.

MAJOR EXCAVATION: Any grading, filling or other operation (other than in connection with a foundation for a structure), involving:

1) Strip or other mining of coal or other minerals, excavating of sand or rock and the crushing of rock, drilling for gas or oil, recovery of metal or natural resources and similar operations;

2) Material alteration of the ground surface so as to affect streets and recreation sites and other public facilities, or physically affect private property within one thousand (1,000) feet of the operation;

3) A volume of earth movement exceeding ten thousand (10,000) cubic yards; or

4) A change in ground elevation exceeding fifteen (15) feet.

MAJOR HIGHWAY: A public street which serves large volumes of high-speed and long-distance traffic I.e Parkway, Turnpike. List the other classifications of streets??? Arterial, Collector, Local See: Minor arterial Highway

MANUFACTURED HOME: A structure, transportable in one (1) or more sections, which is built on a permanent chassis, and is designed for use with or without a permanent foundation when attached to the required utilities. The term includes park trailers, travel trailers, recreational and other similar vehicles, which are placed on a site for more than one hundred eighty (180) consecutive *days*.

MANUFACTURED HOME PARK: A parcel of land which has been planned and improved for the placement of two (2) or more manufactured homes for non-transient use.

MANUFACTURED HOME PARK OR SUBDIVISION: A parcel (or contiguous parcels) of land divided into two (2) or more manufactured home lots for rent or sale.

MANUFACTURED HOUSING: Housing which bears a label, as required by and referred to in the act of November 17, 1982 (P.L.676, No.192), known as the Manufactured Housing Construction and Safety Standards Authorization Act, certifying that it conforms to Federal construction and safety standards adopted under the Housing and Community Development Act of 1974 (Public Law` 92-383, 88 Stat. 139). Factory-built, single-family structures that meet the National Manufactured Home Construction and Safety Standards Act (42 U.S.C. Sec. 5401), commonly known as the HUD (U.S. Department of Housing and Urban Development) code.

MANUFACTURING: The processing and fabrication of any article, substance or commodity.

MANUFACTURING, LIGHT: Manufacturing, including the production, processing, cleaning, testing and distribution of materials, goods, foodstuffs, and products, which, by the nature of the materials, equipment and process utilized, is to a considerable measure clean, quiet, and free of any objectionable or hazardous element.

MARIJUANA: See: *"Medical Marijuana".*

DRAFT

MASSAGE PARLOR: See: *"Therapeutic Massage Facility".*

MEAN HEIGHT: The height level between eaves and ridge for gable, hip or gambrel roofs.

MEDICAL CLINIC: Any establishment where human patients are examined and treated on an outpatient basis by doctors or others who are duly licensed to perform medical healing arts. Not a Substance abuse Treatment Facility.

MEDICAL MARIJUANA: Marijuana for certified medical use as set forth in Pennsylvania Act 16 of 2016.

MEDICAL MARIJUANA GROWER / PROCESSOR FACILITY: The use of the premises by a person, including a natural person, corporation, partnership, association, trust, or other entity, or any combination thereof, holding a permit from the Commonwealth of Pennsylvania Department of Health, to grow and/or process Medical Marijuana, with all growing and processing activity to be conducted indoors.

MEDICAL MARIJUANA DISPENSARY: Use of the premises by a natural person, corporation, partnership, association, trust, or other entity, or any combination thereof, holding a permit from the Commonwealth of Pennsylvania Department of Health, to dispense medical marijuana.

MEDICAL OFFICE: See: *"Office".*

MEMBERSHIP CLUB: A chartered, non-profit organization, the primary purpose of which is the advancement of its members or the community in education, fraternal, cultural, or civic pursuits and activities (Maximum of 5,000 square feet). Also see: *"Athletic Facility", "Day Spa", "Fitness Center", "Gymnasium", "Recreational Facility", "Sports Facility".*

METHADONE TREATMENT FACILITY: A facility licensed by the Department of Health to use the drug methadone in the treatment, maintenance, or detoxification of persons. (Section 621 of the M.P.C.). Also see: "*Substance Abuse Treatment Facility". Trant and Wratcher to review definition*

MINERAL: Any aggregate or mass of mineral matter, whether or not coherent. The term includes, but is not limited to, limestone and dolomite, sand and gravel, rock and stone, earth, fill, slag, iron ore, zinc ore, vermiculite and clay, anthracite and bituminous coal, coal refuse, peat and crude oil and natural gas.

MINERAL REMOVAL: Any extraction of any mineral for sale or commercial purpose that involves removal of the surface of the earth, or exposure of the mineral or sub-surface of the earth to wind, rain, sun or other elements of nature. The term "mineral" as used in this definition includes, but not by way of limitation, anthracite and bituminous coal, lignite, including mining activities carried out beneath the surface of the earth by means of shafts, tunnels, other underground mine openings, limestone and dolomite, sand, gravel, rock, stone, earth, slag, ore, vermiculite, clay and other mineral resources. Also see: *"Quarry".*

MINI-WAREHOUSE: See: *"Self-Storage".* A building consisting of individual self-contained, self-service storage spaces, where each unit is not greater than 500 square feet, and the units are rented for the storage of business and household goods.

MINOR ARTERIAL HIGHWAY: A function classification, established by the American Association of State Highway and Transportation Officials (AASHTO), for the grouping or categorizing of roadways according to the character of services they provide as part of an overall highway system. Minor Arterials connect with and augment the principle arterial system; more emphasis is placed on land access; they are important to intra-community continuity; and lower traffic volumes than principal

DRAFT

arterials and include: Center Road, Haymaker Road, James Street, Monroeville Boulevard, Monroeville Road, Northern Pike, Old William Penn Highway, Pitcairn Road, Stroschein Road, Thompson Run Road and Wilmerding Monroeville Road.

MINOR REPAIR: The replacement of existing work with equivalent materials for the purpose of its routine maintenance and upkeep, but not including the cutting away of any wall, partition or portion thereof, the removal or cutting of any structural beam or bearing support, or the removal or change of any required means of egress, or rearrangement of parts of a structure affecting the exit way requirements; nor shall minor repairs include addition to, alteration of, replacement or relocation of any standpipe, water supply, sewer, drainage, drain leader, gas, soil, waste, vent or similar piping, electrical wiring or mechanical or other work affecting public health or general safety.

MISFEASANCE: The fulfillment of a statutorily imposed duty in an unlawful or improper manner.

MIXED USE DEVELOPMENT: A development or redevelopment that blends mutually supportive uses, including, but not limited to, some combination of residential, commercial, cultural, institutional, recreational, medical and public uses.

MOBILE: The capacity of moving freely or easily, but not necessarily in continuous motion.

MOBILE BUILDING: A transportable building intended for permanent occupancy, contained in one or more sections, built on a permanent chassis, which arrives at a site completed and ready for occupancy except for minor and incidental unpacking and assembly operations, and constructed so that it may be used with or without a permanent foundation. The term includes park trailers, travel trailers, recreational and other similar vehicles which are placed on a site for more than 180 consecutive days.

MOBILE HOME: A prefabricated dwelling unit designed for transportation on streets and highways on its own wheels or on a flat bed or other trailers and arriving at the site where it is intended to be occupied as a dwelling complete and ready for occupancy except for connection to utilities and minor or incidental unpacking and assembly operations and constructed so that it may be used with or without a permanent foundation.

MOBILE HOME PARK: A residential development which is to be occupied by two (2) or more mobile homes.

MOBILIZATION: Those activities when the drilling rig and related equipment and personnel arrive at the well site and are conducting activities to rig up or position the rig equipment at the well and prepare for drilling. This includes all activities and services prior to the drill bit being lowered below the rotary table and entering the conductor pipe in an attempt to make hole ("spud in") for the first time at a pad site.

MODULAR HOME: See: *"Industrialized Housing"* and *"Manufactured Housing".*

MODULE: A module is the smallest protected assembly of interconnected PV cells.

MONOPOLE: A WCF or site which consists of a single pole structure, designed and erected on the ground or on top of a structure, to support communications antennae and connecting appurtenances.

MOSQUE: a Muslim place of worship. See: *"Place of Worship."*

MOTEL: A structure in which lodging is provided for the accommodation of guests, offered to the public for compensation, which contains an office supervised by a person in charge at all hours with

DRAFT

a majority of all rooms having direct access to the outside. "Motel" does not include boardinghouse, lodging house, rooming house or personal-care home, or group home.

MPC: The Pennsylvania Municipalities Planning Code, Act 247 of 1968, 53 P.S. § 10101 et seq., and as it may be amended.

MUNICIPALITY: The Municipality of Monroeville, a Home Rule Charter Municipality, Allegheny County, Pennsylvania.

MUNICIPAL LANDFILL INSPECTOR: Employee(s) of the Municipality of Monroeville, certified by the Department of Environmental Protection, to act as a host municipal inspector of municipal waste landfills and resource recovery facilities with the following authority, including: enter onto the property; inspect any records required by the Department of Environmental Protection; collect samples; and conduct inspections in accordance with Department of Environmental Protection regulations.

MUNICIPAL WASTE: Any garbage, refuse, industrial lunchroom or office waste and any other material including solid, liquid, semisolid or contained gaseous material resulting from operation of residential, municipal, commercial or institutional establishments and from community activities and any sludge not meeting the definition of residual or hazardous waste hereunder from a municipal, commercial or institutional water supply treatment plant, waste water treatment plant, or air pollution control facility.

MUNICIPAL WASTE DISPOSAL OR PROCESSING FACILITY: A waste facility using land for disposing or processing of municipal waste. The facility includes land affected during the lifetime of operations, including, but not limited to, areas where disposal or processing activities actually occur, support facilities, borrow areas, offices, equipment sheds, air and water pollution control and treatment systems, access roads, associated on-site or contiguous collection, transportation and storage facilities, closure and post closure care and maintenance activities and other activities in which the natural land surface has been disturbed as a result of or incidental to operation of the facility.

MUNICIPAL WASTE LANDFILL: A facility using land for disposing of municipal waste. The facility includes land affected during the lifetime of operations, including but not limited to, areas where disposal or processing activities actually occur, support facilities, borrow areas, offices, equipment sheds, air and water pollution control and treatment systems, access roads, associated on-site or contiguous collection, transportation and storage facilities, closure and post closure care and maintenance activities and other activities in which the natural land surface has been disturbed as a result of or incidental to operation of the facility. The term does not include a construction/demolition waste landfill or a facility for the land application of sewage sludge, as more specifically defined in Title 25, Chapter 271.1 of the Pennsylvania Department of Environmental Protection, or successor agency.

MUNICIPAL WASTE SITE: The area where municipal waste processing or disposal facilities are operated. If the operator has a permit to conduct the activities, and is operating within the boundaries of the permit, the site is equivalent to the permit area.

MUNICIPALITIES PLANNING CODE (MPC): The Pennsylvania Municipalities Planning Code, 53 P.S. §10101 *et seq*.

MURAL: Artwork applied to the wall of a building*, which* covers all or most of the wall that depicts a scene or event of natural, social, cultural or historical significance.

NATIVE VEGETATION: Species of plants that exist in this area prior to European settlement; plants within their pre-European settlement range or zone of potential dispersal.

DRAFT

NATURAL TOPOGRAPHIC POINT: An elevation, present in or produced by nature, undisturbed by man.

NATURAL GAS COMPRESSOR STATION: A facility designed and constructed to compress natural gas that originates from an oil and gas well of collection of such wells operating as a midstream facility for the delivery of oil and gas to a transmission pipeline, distribution pipeline, natural gas processing plant or underground storage field, including one or more natural gas compressors, associated buildings, pipes, valves, tanks and other equipment. Also see: *"Oil and Gas."*

NATURAL GAS PROCESSING PLANT: A facility designed and constructed to remove materials such as ethane, propane, butane and other constituents or similar substances from natural gas to allow the natural gas to be of such quality as is required or appropriate for transmission or distribution to commercial markets, but not including facilities or equipment that are/is designed and constructed primarily to remove water, water vapor, oil or naturally occurring liquids from natural gas. Also see: *"Oil and Gas."*

NATURALIZED STORMWATER MANAGEMENT BASIN: (Rain Garden) A facility for the temporary storage of stormwater runoff that is landscaped with grasses and native plants and is designed, constructed, and maintained in accordance with recognized best management practice techniques as recommended by the Pennsylvania Department of Environmental Protection.

NATURE PRESERVE: Areas in which human activities are very limited and where the natural environment is protected from man-made changes.

NET METERING AGREEMENT: An agreement with a local electric utility that allows customers to receive a credit for surplus electricity generated by certain renewable energy systems.

NEW CONSTRUCTION: Structures for which the start of construction commenced on or after the effective start date of this floodplain management ordinance and includes any subsequent improvements to such structures. Any construction started after August 1, 1979 and before the effective start date of this floodplain management ordinance is subject to the ordinance in effect at the time the permit was issued, provided the start of construction was within 180 days of permit issuance.

NEW MANUFACTURED HOME PARK OR SUBDIVISION: A manufactured home park or subdivision for which the construction of facilities for servicing the lots on which the manufactured homes are to be affixed (including at a minimum, the installation of utilities, the construction of streets, and either final site grading or the pouring of concrete pads) is completed on or after the effective date of floodplain management regulations adopted by a community.

NFPA: National Fire Protection Association

NIGHTCLUB: A place of assembly, other than a dwelling unit, including private clubs which may offer food, drink, and entertainment, either live or recorded, and characterized by low light levels and closely packed tables, whether or not the consumption of alcoholic beverages is permitted or allowed on the premises. A nightclub may also operate as a restaurant during all or part of its hours of operation. An adult cabaret shall not be considered a nightclub but shall be considered a sexually oriented business.

NITS: A unit of measure used for lighting expressed as candelas per meter squared.

NO-IMPACT HOME-BASED BUSINESS: A business or commercial activity administered or conducted as an accessory use which is clearly secondary to the use as a residential dwelling and

DRAFT

which involves no customer, client or patient traffic, whether vehicular or pedestrian, pickup, delivery or removal functions to or from the premises, in excess of those normally associated with residential use. The business or commercial activity must satisfy the following requirements:

1) The business activity shall be compatible with the residential use of the property and surrounding residential uses;

2) The business shall employ no employees other than family members residing in the dwelling;

3) There shall be no display or sale of retail goods and no stockpiling or inventory of a substantial nature;

4) There shall be no outside appearance of a business use, including, but not limited to, parking or lights;

5) The business activity may not use any equipment or process, which creates noise, vibration, glare, fumes, odors or electrical or electrical interference, including interference with radio or television reception, which is detectable in the neighborhood;

6) The business activity may not generate any solid waste or sewage discharge, in volume or type, which is not normally associated with residential use in the neighborhood;

7) The business activity shall be conducted only within the dwelling and may not occupy more than twenty-five percent (25%) of the habitable floor area;

8) The business may not involve any illegal activity; and

9) The business activity must be conducted within the principal structure.

NONCONFORMING LOT: A lot area or dimension of which was lawful prior to the adoption or amendment of this Ordinance, but which fails to conform to the requirements of the zoning district in which it is located by reasons of such adoption or amendment.

NONCONFORMING STRUCTURE: A structure or part of a structure manifestly not designed to comply with the applicable use or extent of use provisions in this Ordinance or amendment heretofore or hereafter enacted, where such structure lawfully existed prior to the enactment of this Ordinance or amendment or prior to the application of this Ordinance or amendment to its location by reason of annexation. Such nonconforming structures include, but are not limited to, nonconforming signs.

NONCONFORMING USE: A use that lawfully occupied a structure, land or object of natural growth, which is inconsistent with the provisions of this Ordinance or an amendment thereto.

NON-PARTICIPATING LANDOWNER: Any landowner except those on whose property all or a portion of a wind energy facility is located. Any landowner that has not signed a lease agreement with the project owner or developer of a wind energy facility.

NON-RESIDENTIAL: When used with reference to a building, structure or use, shall mean designated, intended or used for purposes other than those of a dwelling.

NON-TOWER WIRELESS COMMUNICATIONS FACILITY (NON-TOWER WCF): All non-tower wireless communications facilities, including, but not limited to, antennas and accessory equipment.

DRAFT

Non-tower WCFs shall not include support structures for antennas or any accessory equipment that is mounted to the ground or at ground level.

NUDITY OR A STATE OF NUDITY: The appearance of a human bare buttock, anus, male genitals, female genitals, or female breast.

NURSERY:

1) A place where young children are cared for during the working day; see: *"Nursery School".*

2) A place where young plants and trees are grown for sale or for planting elsewhere.

NURSERY SCHOOL: A school designed to provide daytime care or instruction for two or more children of preschool age. See: *"Child Care Center".*

NURSING HOME FACILITY: Also see: *"Assisted Living Facility", "Continuing Care Facility", "Group Home", "Hospice", "Personal Care Home Facility", "Skilled Nursing Facility";* A place of residence for people who suffer from physical or mental disabilities, and who require constant nursing care to perform their daily living activities such as taking a bath, getting dressed and going to the bathroom. An institution for the care of persons who are residents by virtue of requiring specialized care and supervision relating to health, social and/or rehabilitative services. The facility shall be licensed by the Commonwealth of Pennsylvania as a skilled or intermediate care facility. The terms shall not include hospitals, psychiatric hospitals, or alcohol and drug abuse rehabilitation centers. Nursing homes are licensed medical facilities that are inspected and licensed by the Pennsylvania Department of Health. They must meet both state and federal regulations. There is third party reimbursement (Medicare and Medicaid) for those who qualify based on income.

OBSTRUCTION:

1) Any wall, dam, wharf, embankment, levee, dike, pile abutment, projection, excavation, channel, rectification, culvert, building, fence, stockpile, refuse, fill, structure, or matter in, along, across, or projecting into any channel, watercourse, or flood-prone area, which may impede, retard, or change the direction of the flow of water either in itself or by catching or collecting debris carried by such water, or which is placed where the flow of the water might carry the same downstream to cause the damage of life and property.

2) Any structure, growth, or other object, including a mobile object, which exceeds a limiting height set forth by this Ordinance.

OCCUPANT: Any person over one year of age living, sleeping, cooking, or eating in or actually having possession of a dwelling unit or a rooming unit, except that in dwelling units a guest will not be considered an "occupant."

OCCUPIED BUILDING: A dwelling, school, *hospital*, place of worship, public library or other building used for public or private gathering that is occupied or in use.

OFFICE:

DRAFT

1) A room or group of rooms used for conducting the affairs of a business, profession, service, industry or government and generally furnished with desks, tables, files and communication equipment.

2) A building used primarily for conducting the affairs of a business, profession, service, industry or government, or like activity, and may include ancillary services for office workers, such as a restaurant, coffee shop, newspaper or candy stand and child care facilities.

ODOROUS MATTER: Any matter or material that produces a response in the normal human nose.

OFFAL: The entrails and internal organs of an animal used as food.

OIL & GAS: means crude oil, natural gas, methane gas, coal bed methane gas, propane, butane and/or any other liquid hydrocarbons, constituents or similar substances that are produced by drilling and oil or gas well.

OIL & GAS PIPELINES: means all parts of those physical facilities regulated by the federal, state or local agencies, such as PHMSA, DEP and/or the Federal Regulatory Commission through which oil and/or natural gas moves in transportation, including pipes, valves, other appurtenances attached to pipes, compressor units, metering stations, regulator stations, delivery stations, holders, launcher/receiver stations and fabricated assemblies.

OIL & GAS DEVELOPMENT: The well site preparation, well site construction, drilling, hydraulic fracturing and/or site restoration associated with and oil and/or gas well of any depth; water and other fluid storage, impoundment located on the same parcel as a well site; and the installation and use of all associated equipment, including tanks, meters and other equipment and structures, whether temporary or permanent. The definition also includes site preparation, construction, installation, maintenance and repair of other activities and equipment associated with the exploration for and production of oil and gas. The definition does not include oil and gas pipelines, compressor stations and natural gas processing plants, impoundments not located on the well site or facilities performing the equivalent functions that operate as mid-stream facilities that are only authorized as specified by the Zoning Ordinance.

ONE FAMILY RESIDENTIAL: See: *"Single-Family Residential".*

ONE HUNDRED YEAR FLOOD: A flood that, on the average, is likely to occur once every one hundred (100) years (i.e., that has one percent (1%) chance of occurring each year, although the flood may occur in any year).

OPERATE: To construct a municipal waste management facility in anticipation of receiving solid waste for the purpose of processing or disposal; to receive, process or dispose of solid waste; to carry on an activity at the facility that is related to the receipt, processing or disposal of waste or otherwise affects land at the facility; to conduct closure and post-closure activities at a facility.

OPERATOR:

1) The person or municipality that operates a municipal waste processing or disposal facility.

2) Any person, partnership, company, corporation and its subcontractors and agents who has interest in real estate for the purpose of exploring or drilling for, producing, or transporting gas or oil.

DRAFT

ORNAMENTAL TREE: Deciduous trees with characteristic flower or foliage color of ornamental/aesthetic value. Ornamental trees are generally smaller, 20 to 40 feet at mature height, than canopy/shade trees.

OUTDOOR ADVERTISING STRUCTURE: See: *"Billboard and/or Outdoor Advertising Sign".*

OUTDOOR DINING: use of an adjacent, outside area by a food or beverage establishment for the same eating and drinking activities that occur within the establishment.

OUTDOOR SEATING: See *"Outdoor Dining".*

OVERLAY DISTRICT A zoning overlay district superimposes an additional set of regulations over an existing zoning district, or multiple zoning districts. Zoning overlays, or overlay zoning, are zoning districts applied to specific geographies based on unique, defined criteria, which are in addition to the standards outlined for the underlying base zoning district. Where an overlay regulation conflicts with a base district regulation, the requirements of an overlay district shall supersede those of the base district.

OVERNIGHT: Occurring during the night or lasting throughout the night.

OWNER: Any person, agent, firm or corporation having legal or equitable interest in the property. Any person who alone or jointly or severally with others:

1) Shall have legal title to any premises, dwelling or dwelling unit, with or without accompanying actual possession thereof; or

2) Shall have charge, care or control of any premises, dwelling or dwelling unit as owner or agent of the owner or an executor, administrator, trustee or guardian of the estate of the owner. Any such person thus representing the actual owner shall be bound to comply with the provisions of this chapter and of the rules and regulations adopted pursuant thereto to the same extent as if he/she were the owner.

PARCEL:

1) A lot or contiguous group of lots in single ownership or under single control and usually considered a unit for the purpose of development.

2) A lot, block or other area in which land is held or into which is subdivided but does not include a highway.

PARK: A parcel of ground intended primarily for beautification and aesthetic improvement of the Municipality in general or for active and passive recreational purposes or both.

PARKING BAY: The parking module consisting of one (1) or two (2) rows of parking spaces and the aisle from which motor vehicles enter and leave spaces.

PARKING DEMAND ANALYSIS: The amount of parking that would be used at a particular time, place and price—calculated by a qualified engineer. It is a critical factor in evaluating parking problems and solutions.

DRAFT

PARKING GARAGE: A building that is used exclusively for the parking or storage of currently licensed vehicles, whether the building is a principal or accessory use.

PARKING LOT: Any land area used or intended to be used as an off-street, ground-level open area, usually improved, for the temporary parking of three (3) or more licensed motor vehicles.

PARKING SPACE: A space for the temporary parking of a motor vehicle within a public or private parking area.

PARKS AND RECREATION: A facility operated by a public agency, non-profit agency, or home owners' association to provide open space and recreational facilities serving the neighborhood, the community, or the general public.

PARTICIPATING LANDOWNER: a landowner who has signed a lease agreement with the project owner or developer of a wind energy facility.

PASSIVE OPEN SPACE: An area of land used for informal leisure time activities such as picnicking, nature study, bird watching, and nature photography.

PATIO: A paved outside area off of a house or a building that is used as a seating or living space.

PATIO HOME: a house in a suburban setting, part of a unit of several houses attached to each other, typically with shared walls between units, and with exterior maintenance and landscaping provided through an association fee.

PA. U.C.C: Pennsylvania Uniform Construction Code.

PERMIT: An official document or certificate issued by any federal, state, *county* or municipal authority having jurisdiction that authorizes performance of a specified activity.

PERMITTEE and/or LICENSEE: The person to whom a permit is issued. a person in whose name a permit and/or license to operate a sexually oriented business has been issued, as well as the individual listed as an application the application for a permit and/or license.

PERMIT AREA: The area of land and water within the boundaries of the permit, which is designated on the permit application maps as approved by the Pennsylvania Department of Environmental Protection. The area includes the areas which are or will be affected by the municipal waste processing or disposal facility.

PERMITTED USE: A use by right which is specifically authorized in a particular zoning district.

PERSON: An individual, partnership, public or private association or corporation, firm, trust, estate, municipality, governmental unit, public utility or any other legal entity whatsoever, which is recognized by law as the subject of rights and duties.

PERSONAL CARE HOME FACILITY: Also See: *"Assisted Living Facility", "Continuing Care Facility", Group Home", "Hospice", "Nursing Home Facility", "Skilled Nursing Facility". A* residential premises for ambulatory, persons in which food, shelter, and personal assistance or supervision are provided for a period exceeding twenty-four (24) consecutive hours for more than four (4) persons who are not relatives of the operator and who require assistance or supervision in such matters as dressing, bathing, diet, or medication prescribed for self-administration but do not require hospitalization or care in a skilled nursing home or intermediate care facility as defined in current Commonwealth of Pennsylvania Licensure requirements. Personal care homes are residential facilities that offer

DRAFT

personal care services, assistance and supervision to four or more persons. They are inspected and licensed by the Pennsylvania Department of Human Services. Sometimes they are advertised as "assisted care," "retirement homes" or "boarding homes." A personal care home must have a license in order to operate in Pennsylvania. There are state licensing regulations that apply to personal care homes. These regulations are aimed at protecting the health, safety and well-being of the residents. There are no federal regulations for personal care homes. There is no third-party reimbursement for personal care homes, but many personal care homes accept residents of low income who receive Supplemental Security Income (SSI). The terms shall not include hospitals, psychiatric hospitals, or alcohol and drug abuse rehabilitation centers.

PERSONAL EXPRESSION SIGN: Any sign that expresses an opinion, interest or position, not including political signs.

PERSONAL SERVICES: A commercial establishment providing personal services as; barber shops, beauty shops, day spas, dry cleaning, health clubs, laundering, nail salons, shoe repair and tailor shops and tanning salons. Personal services do not include tattoo parlors.

PET CREMATORIUM: See: *"Crematorium".*

PHMSA: The Pipeline and Hazardous Materials Safety Administration of the United States Department of Transportation.

PHARMACY: A retail store which primarily sells prescription drugs, patent medicines, and surgical and sickroom supplies.

PHOTOVOLTAIC (PV): A semiconductor-based device that converts light directly into electricity.

PIPELINE: All parts of those physical facilities through which gas, hazardous liquids, fresh water, salt water or chemicals move in transportation, including, but not by way of limitation, pipes, valves and other appurtenances attached to the pipes, whether or not laid in a public or private easement or public or private right-of-way within the Municipality, including, but not by way of limitation, gathering lines, production lines and transmission lines.

PIPELINE CONSTRUCTION: The initiation of any excavation or other disturbance of property for the purpose of installation, construction, maintenance, repair, replacement, modification or removal of a pipeline.

PIPELINE OPERATOR: Any person owning, operating or responsible for operating a pipeline.

PIPELINE PERMIT: A permit for the movement of oil, gas, water, or other products through pipelines issued by the federal, state or local government or other applicable authority.

PLACE OF WORSHIP: A church, synagogue, temple, mosque, or other building used exclusively for public religious worship, including: customary, incidental, educational and social activities in conjunction therewith.

1) Church: A building used for public Christian worship.

2) Mosque: A Muslim place of worship.

3) Synagogue: The building where a Jewish assembly or congregation meets for religious worship and instruction.

DRAFT

4) Temple: A building devoted to the worship, or regarded as the dwelling place, of a god or gods or other objects of religious reverence.

PLANNED GROUP UNIT: See: *"Planned Non-Residential Development".*

PLANNED NON-RESIDENTIAL DEVELOPMENT: A zoning lot on which the development of more than one (1) principal structure, built in accordance with a unified site development plan, which may provide for industrial, recreation, open space, and/or commercial uses, and which is reviewed and approved in accordance with the provisions of this Ordinance.

PLANNED RESIDENTIAL DEVELOPMENT (PRD): At least five (5) acres of land, controlled by one (1) landowner, to be developed as a single entity for a number of dwelling units, the development plan for which does not correspond in lot size, bulk or type of buildings, density, lot coverage and required open space to the regulations established in any one residential district of this Ordinance. from the MPC: "Planned residential development," an area of land, controlled by a landowner, to be developed as a single entity for a number of dwelling units, or combination of residential and nonresidential uses, the development plan for which does not correspond in lot size, bulk, type of dwelling, or use, density, or intensity, lot coverage and required open space to the regulations established in any one district created, from time to time, under the provisions of a municipal zoning ordinance.

PLANNING AGENCY: The planning commission, planning department, or a planning committee, appointed by Council of the Municipality of Monroeville, Allegheny County, Pennsylvania.

POLE / PYLON SIGN: A sign, which is detached from a building and supported by no more than two (2) poles or other structural supports, which are architecturally dissimilar to the design of the sign.

POLITICAL SIGN: A temporary sign relating to the election of a person to a public office or a political party or a matter to be voted upon at an election by the public.

POMACE: The dry or pulpy residue of material (such as fruit, seeds, or fish) from which a liquid (such as juice or oil) has been pressed or extracted.

PORCH: An unenclosed extension of a building, adjoining an entrance to a building and usually having a separate roof.

PORTABLE STORAGE UNIT: Portable containers, not affixed to the land, for the purpose of temporarily storing, loading or unloading furniture, clothing, or other personal or household belongings as part of the process of renovation or moving, the relocation of belongings to an off-site commercial storage location, or on-site storage in the aftermath of the property being affected by fire or natural disaster.

POST-CLOSURE: Activities after *closure* which are necessary to ensure compliance with Title 25 Environmental Protection of the Pennsylvania Department of Environmental Protection regulations, including application of final cover, grading, re-vegetation; groundwater, surface water and gas monitoring; erosion control and gas control; leachate treatment; and abatement of pollution or degradation to land, water, air or other natural resources.

POST-FIRM STRUCTURE: A structure for which construction or substantial improvement occurred after December 31, 1974, or on or after the community's initial Flood Insurance Rate Map (FIRM) dated *August 1, 1979*, whichever is later, and, as such, would be required to be compliant with the regulations of the National Flood Insurance Program.

DRAFT

PRACTICABLE ALTERNATIVE: An alternative that is available and capable of being done after taking into consideration cost, existing technology and logistics in light of overall project purposes.

PRE-FIRM STRUCTURE: A structure for which construction or substantial improvement occurred on or before December 31, 1974, or before the community's initial Flood Insurance Rate Map (FIRM) dated *August 1, 1979*, whichever is later, and, as such, would not be required to be compliant with the regulations of the National Flood Insurance Program.

PRINCIPAL ARTERIAL HIGHWAY: A function classification, established by the American Association of State Highway and Transportation Officials (AASHTO), for the grouping and categorizing of roadways according to the character of service they provide as part of an overall highway system. Principal Arterial Highways have high traffic volumes, carry the majority of trips between regional activity centers and communities and provide some access to property.

PRINCIPAL STRUCTURE: A building and or structure in which the main or principle use of the lot on which said building is situated is conducted.

PRINCIPAL USE: The principle, permissible purpose for which land, buildings or structures may be used.

PROCESSING: The technology used for the purpose of reducing the volume or bulk of municipal or residual waste or any technology used to convert part of all of such waste materials for off-site reuse, processing facilities include, but are not limited to, transfer facilities, composting facilities, and resource recovery facilities.

PROJECTING SIGN: A sign attached directly to the primary structure that shall not extend more than three (3) feet from the wall and shall clear the grade by at least ten (10) feet, or fourteen (14) feet six (6) inches above a vehicular accessible area.

PROPERTY OWNER: The person, firm, company, corporation, or individuals who are the owners in fee simple of property, whose name(s) appear last in the Recorder of Allegheny County Tax Assessor's office. For the purpose of this Ordinance, the "property owner" may also include any individual who is a legal agent of the owner.

PROTECTED STRUCTURE: Any full-time occupied residence, commercial business, school, religious institution or other public building that may be impacted by noise generated from activity associated with oil and gas well development and/or natural gas compressor station or processing plant. This term shall not include any structure:

1) Owned by a grantor or lessor who has signed an agreement granting surface rights to drill a well and/or erect and maintain a natural gas compressor station or processing plant; or

2) Whose owner (or occupants) has (have) signed a waiver relieving the operator(s) from implementation of the measures established in this ordinance for the owner's (occupant's) benefit.

PUBLIC BUILDING: A structure owned or leased and operated by a governmental agency.

PUBLIC DOCUMENT: A document of public interest issued or published by a political body or otherwise connected with public business.

DRAFT

PUBLIC HEARING: A formal hearing held pursuant to public notice by the governing body, board or planning agency, intended to inform and obtain public comment, prior to taking action, in accordance with the Municipalities Planning Code.

PUBLIC IMPROVEMENTS: All roads, streets, walkways, sidewalks, gutters, curbs, sewers, waterlines, stormwater management facilities, landscaping, street lighting, traffic control devices and other facilities to be dedicated to or maintained by the Municipality for which plans and specifications must comply with applicable Municipal Codes.

PUBLIC INTEREST SIGN: A sign on private or public property that displays information pertinent to the safety or legal responsibilities of the public, for example, "warning" and "no trespassing" signs.

PUBLIC MEETING: A forum held pursuant to the notice under 65 PA C.S. Ch. 7, relating to open meetings, known as the "Pennsylvania Sunshine Act".

PUBLIC NOTICE: A notice published once each week for two (2) consecutive weeks in a newspaper of general circulation in the Municipality. Such notice shall state the time and place of the hearing and the particular nature of the matter to be considered at the hearing. The first publication shall not be more than thirty (30) days and the second publication shall not be less than seven (7) days from the date of the hearing.

PUBLIC RECORD: A record that a governmental unit is required by law to keep, such as land deeds kept at a *county* courthouse. Public records are generally open to view by the public. *Cf*. Public Document.

PUBLIC USE: A lot, building, structure or any combination thereof owned and exclusively occupied by a federal, state or local governmental agency.

PUBLIC UTILITY BUILDING OR STRUCTURE: Any administrative building, maintenance building, garage or other structure intended for human occupancy or storage of movable equipment or any part of essential public utility installation, as defined herein, other than the general transmission distribution system provided by public utilities, regulated by the Public Utilities Commission (PUC) or any agency, franchisee or authority of the Municipality of Monroeville which is reasonably necessary to furnish adequate service to the general public both inside and outside of the Municipality, including but not limited to long distance transmission facilities such as electrical power lines or high pressure natural gas or petroleum lines, switching facilities, substations, treatment plants, reservoirs, water towers, transmission towers and similar facilities.

PUBLIC UTILITY FACILITY: Building, structures and facilities, including generating and switching stations, poles, lines, pipes, pumping stations, repeaters, antennas, transmitters and receivers, valves, and all buildings and structures relating to the furnishing of utility services, such as electric, gas, telephone, water, sewer and public transit to the public (Utility Substation). Excluded from this definition are commercial operations, i.e., Commercial Communication Antenna and Commercial Communication Tower, etc.

PYLON SIGN: See: *"Pole Sign".*

QUAD-PLEX: Multi-family housing units that are divided into four separate spaces. From the outside, they may just look like one big house.

QUARRY: A place where rock, ore, stone and similar materials are excavated or crushed for sale or for off-tract use. Quarries shall not include gas wells or oil wells. Also see: *"Mineral Removal."*

DRAFT

REAL ESTATE SIGN: A temporary sign indicating the sale, rental or lease of the premises on which the sign is placed.

REAR YARD: ~~A yard across the full width of the lot, measured in depth from the rear property line of the lot to the nearest point of the principal structure of the lot. The rear yard is typically opposite the front yard; however, lots shall only provide one (1) rear yard regardless of the number of front yards~~. See: *"YARD, REAR"*

RECREATION CLUB: A non-commercial facility operated by and for its members and providing recreational facilities for the use of members and their guests.

RECREATIONAL FACILITY: An area used or intended to be used for sports, or other recreational pursuits, including playing field(s), court(s), playground(s) and spectator area(s). Also see: "*Athletic Facility", "Day Spa", "Fitness Center", "Gymnasium", "Membership Club", "Sports Facility".*

RECREATIONAL VEHICLE: A vehicle which is:

1) Built on a single chassis;

2) Not more than four hundred (400) square feet, measured at the largest horizontal projections;

3) Designed to be self-propelled or permanently towable by a vehicle; and

4) Not designed for use as a permanent dwelling but as temporary living quarters for recreational, camping, travel or seasonal use.

RECYCLING COLLECTION FACILITY: Center for the acceptance of recyclable material from the public by donation, redemption, or purchase. A collection facility may include: reverse vending machines, a small recycling collection facility, and a large recycling collection facility.

RE-DRILL: Deepening or sidetrack/horizontal drilling of the existing well bore extending more than one hundred fifty (150) feet from such well bore.

REFUSE: All solid waste materials which are discarded as useless. All solid wastes except body wastes, and shall include garbage, ashes and rubbish.

REGISTERED PROFESSIONAL: An individual, licensed in the Commonwealth of Pennsylvania to perform services or activities required by provisions of this ordinance and qualified by training and experience to perform the specific services and/or activities with technical competence.

REGULATORY FLOOD ELEVATION: The base flood elevation (BFE) or estimated flood height as determined using simplified methods plus a freeboard safety factor of one and one-half (1 ½) feet.

REHABILITATION CLINIC: See: *"Substance Abuse Treatment Facility".*

RELATED EQUIPMENT: Any piece of equipment related to, incidental to, or necessary for, the operation of a Commercial Communication Tower or Commercial Communication Antenna. By way of illustration, not limitation, Related Equipment includes generators and base stations.

RELIGIOUS ESTABLISHMENT: See *"Place of Worship".*

REMUNERATION: Something given in exchange for goods or services rendered.

DRAFT

REPETITIVE LOSS: Flood related damages sustained by a structure on two (2) separate occasions during a ten (10)-year period for which the cost of repairs at the time of each such flood event, on average, equals or exceeds twenty-five percent (25%) of the market value of the structure before the damages occurred.

REQUIRED FRONT YARD: See: *"Yard"* definitions.

RESEARCH DEVELOPMENT FACILITY: Any establishment, including laboratories, which carries on investigation in the natural, physical or social sciences, and engineering and development as an extension of such investigation, with the possible objective of creating end product, which may include supporting storage and transportation facilities and pilot manufacturing.

RESEARCH LABORATORY: A facility for applied research conducted within an enclosed structure where no good are produced in quantity.

RESIDENTIAL PLAN IDENTIFICATION SIGN: Any sign used to identify the name of a residential development containing no commercial message and located at the principal entrances of such development.

RESIDENTIAL USE:

1) The use of a building or structure or parts thereof as a dwelling.

2) The use of land, buildings or structure for human habitation.

RESIDUAL WASTE: Garbage, refuse, other discarded materials or other waste, including solid, liquid, semisolid or contained gaseous materials resulting from industrial, mining and agricultural operations; and sludge from an industrial, mining or agricultural water treatment facility, waste water treatment or air pollution control facility, if it is not hazardous. The term does not include the Coal Refuse Disposal Control Act (52 P.S. Section 30.51-30.101). The term does not include treatment sludge from coal mine drainage treatment plants, disposal of which is being carried on under and in compliance with a valid permit issued under The Clean Streams Law (35 P.S. Section 691.1 - 691.1001).

RESTAURANT: An establishment where food and drink are prepared, served and consumed primarily within the principal building. Also see: *"Retail Food Restaurant".*

RETAINING WALL: a structure that holds or retains soil behind it, and is usually under four feet in height

RETAIL FOOD RESTAURANT: A fixed small retail facility in which food or drink is offered or prepared primarily for retail sale where no consumption takes place inside the establishment. Such facilities may include take-out pizza shops, delicatessen, and ice cream stands. Also see: *"Restaurant."*

RETAIL SALES: Establishment engaged in selling goods or merchandise to the public for personal or household consumption and rendering services incidental to the sale of such goods.

RETAIL SALES, OUTDOOR: The display and sale of products and services primarily outside of a building or structure, including vehicles, garden supplies, nursery, food and beverages, boats and aircraft, farm equipment, motor homes, burial monuments, building and landscape materials and lumber yards.

DRAFT

RETENTION POND: A basin that has a permanent pool of water throughout the year. A wet pond also may be called a "wet basin".

REVOLVING SIGN: A sign, which revolves in a circular motion rather than remaining stationary on its supporting structure.

RE-WORK: Re-entry of an existing well within the existing bore hole or by deepening or sidetrack/horizontal operations (which do not extend more than one hundred fifty (150) feet horizontally from the existing well bore) or replacement of well liners or casings.

RIDGELINE: The portion of a hillside that forms the horizon where a steep slope of twenty-five percent (25%) or greater interfaces with less steeply sloped land above and beyond the SSO, Steep Slope Overlay boundary.

RIFLE RANGE: See "Gun Range"

RIGHT-OF-WAY: Land reserved or dedicated for use as a street, pedestrian way, or other means of public or private transportation; or for an electric transmission line, oil or gas pipeline, water main, sanitary or storm sewer, or other special use. A right-of-way includes the entire area reserved or dedicated for the use.

ROOF SIGN: Any sign erected and constructed wholly on the roof of a building, supported by the roof structure.

RUBBISH: All non-putrescible municipal waste except garbage and other decomposable matter. This category includes but it not limited to ashes, bedding, cardboard, cans, crockery, glass, paper, metal, plant growth and wood and yard cleanings.

SALVAGE YARD: The dismantling or wrecking of used motor vehicles, trucks, trailers, farm equipment or mobile homes, or the storage, sale or dumping of dismantled or partially dismantled, obsolete or wrecked vehicles or their parts, or any other salvageable materials.

SANDWICH BOARD: A movable sign consisting of two (2) faces connected and hinged at the top.

SCAVENGING: The unauthorized and uncontrolled removal of material placed for collection or from a solid waste processing or disposal facility.

SCHOOL: Also see: *"Educational Institution", "Vocational School."* A public or private establishment approved by the Commonwealth of Pennsylvania to provide formal academic and/or vocational education at the kindergarten, elementary and secondary levels.

SCREENING: Screening relative to this Ordinance shall mean a fence, evergreen hedge or wall at least six (6) feet high, provided in such a way that it will block a line of sight. The screening may consist of either one (1) or several rows of bushes or trees or of a constructed fence or wall.

SEAT: A fixed seat in a theater, auditorium or meeting room, or twenty-four (24) lineal inches of an installed bench or pew, or in the absence of these, six (6) square feet of floor space in the seating area.

SECURITY ILLUMINATION: Level of illumination in prescribed areas of 0.5-foot candles.

SELF-SERVICE LAUNDRY: See: *"Laundromat".*

DRAFT

SELF STORAGE: Also see: *"Mini-Warehouse."* A building consisting of individual self-contained, self-service storage spaces, where each unit is not greater than 500 square feet, and the units are rented for the storage of business and household goods.

SEMI-NUDE: A state of dress in which clothing covers no more than the genitals, pubic region, and areola of the female breast, as well as portions of the body covered by supporting straps or devices.

SENIOR HOUSING: Also see: *"Housing for the Elderly",* Housing that is suitable for the needs of an aging population. It ranges from independent living to 24-hour care. In senior housing there is an emphasis on safety, accessibility, adaptability, and longevity that many conventional housing options may lack.

SETBACK: The required minimum horizontal distance between a property line and the edge of a principal structure, as per this ordinance. ~~the front yard line and the front edge of a principal structure.~~

SEWAGE TREATMENT RESIDUAL: shall mean any coarse screenings, grit and dewatered or air-dried sludge from sewage treatment plants and pumping from septic tanks or seepage which are a municipal solid waste and require proper disposal under Act 97.

SEXUALLY ORIENTED BUSINESS: a business that is part of the sex industry, such as an adult bookstore**,** adult video store, adult cabaret, adult motel, adult motion picture theater, adult theater, escort agency, nude model studio, or sexual encounter center.

1) *ADULT ARCADE:* Any place to which the public is permitted or invited wherein coin-operated or slug-operated or electronically, electrically, or mechanically controlled still or motion picture machines, projectors, or other image-producing devices are maintained to show images to five (5) or fewer persons per machine at any one (1) time, and where the images so displayed are distinguished or characterized by the depicting or describing of "specified sexual activities" or "specified anatomical areas".

2) *ADULT BOOKSTORE or ADULT VIDEO STORE:* A commercial establishment which, as one of its principal business purposes, offers for sale or rental for any form of consideration any one or more of the following:

    a) Books, magazines, periodicals or other printed matter, or photographs, films, motion pictures, videocassettes or video reproductions, slides, or other visual representations which depict or describe "specified sexual activities" or "specified anatomical areas"; or

    b) Instruments, devices, or paraphernalia, which are designed for use in connection with "specified sexual activities".

    c) A commercial establishment may have other principal business purposes that do not involve the offering for sale or rental of material depicting or describing "specified sexual activities" or "specified anatomical areas" and still be categorized as Adult Bookstore or Adult Video Store. Such other business purposes will not serve to exempt such commercial establishment from being categorized as an Adult Bookstore or Adult Video Store so long as one (1) of its principal business purposes is the offering for sale or rental for consideration the specified materials which depict or describe "specified sexual activities" or "specified anatomical areas".

DRAFT

3) *ADULT CABARET:* A nightclub, bar, restaurant, or similar commercial establishment, which regularly features:

   a) persons who appear in the nude or in a partial state of nudity; or

   b) live performances which are characterized by the exposure of "specified anatomical areas", or "specified anatomical areas".

4) *ADULT MOTEL:* A hotel, motel, or similar commercial establishment which:

   a) Offers accommodations to the public for any form of consideration and provides patrons with closed-circuit television transmissions, films, motion pictures, videocassettes, slides, or other photographic reproductions which are characterized by the depiction or description of "specified sexual activities" or "specified anatomical areas"; and has a sign visible from the public right-of-way which advertises the availability of this adult type of photographic reproductions; or

   b) Offers any single sleeping room for rent, four (4) or more times in one (1) calendar *day* during five (5) or more calendar *days* in any continuous thirty (30) *day* time period.

5) *ADULT MOTION PICTURE THEATER:* A commercial establishment where, for any form of consideration, films, motion pictures, videocassettes, slides, or similar photographic reproductions are regularly shown which are characterized by the depiction or description of "specified sexual activities" or "specified anatomical areas".

6) *ADULT THEATER:* A theater, concert hall, auditorium, or similar commercial establishment which regularly features persons who appear in a state of nudity or live performances which are characterized by the exposure of "specified anatomical areas" or "specified sexual activities".

7) *ESCORT AGENCY:* A person or business association, who furnishes, offers to furnish, or advertises to furnish escorts as one of its primary business purposes for a fee, tip, or other consideration.

8) *NUDE MODEL STUDIO:* Any place where a person who appears in a state of nudity or displays "specified anatomical areas" is provided to be observed, sketched, drawn, painted, sculptured, photographed, or similarly depicted by other persons who pay money or any form of consideration.

9) SEXUAL ENCOUNTER CENTER: A business or commercial enterprise that, as one (1) of its primary business purposes, offers for any form of consideration:

   a) Physical contact in the form of wrestling or tumbling between persons; or;

   b) Activities between male and female persons and/or persons of the same sex when one (1) or more of the persons is/are in a state of nudity or semi-nude.

SHARED PARKING: Off-street parking that two or more landowners or tenants share.

SHIPPING CONTAINER: See: *"Portable Storage Unit".*

DRAFT

SHOPPING CENTER: A group of commercial establishments, which is planned, developed, owned, and managed as a unit, related in its location, size and type of shops to the trade area that the unit serves.

SHORT TERM RENTAL: Also see: *"Bed and Breakfast, Air Bed and Breakfast.* A residential dwelling unit that is rented wholly or partially for a fee for a period of less than thirty (30) continuous days and does not include a hotel or a bed and breakfast establishment or a bed and breakfast homestay.

SHRUB: A woody plant, usually with multiple stems, each of which has a diameter at breast height (dbh) of less than three inches. Shrubs are generally less than 20 feet tall at maturity.

SIDE YARD: See: *"YARD, SIDE"* ~~The prescribed minimum open space between the front yard line and the rear yard line measured perpendicularly from the side lot line. Any lot line, not a rear lot line or a front lot line shall be deemed as a side lot line.~~

SIDEWALK: A walk for pedestrians (often alongside a road) constructed to the standards set forth in this ordinance. Reference the Subdivision and Land Development Ordinance (SALDO) for specific standards and details.

SIDEWALK STANDARDS AND SPECIFICATIONS: The standards and specifications for the construction, reconstruction or repair of sidewalks contained in and hereby made a part of this Ordinance. Reference the Subdivision and Land Development Ordinance (SALDO) for specific standards and details.

SIGN: Any device, fixture, placard, or structure that uses any color, form of graphic, illumination, logos, symbol, or writing to identify and communicate, announce the purpose of, or identify the purpose of a person or entity, or to communicate information of any kind to the public.

1) *ADDRESS SIGN:* A sign or individual lettering numbering that designate the street number and/or street name for identification purposes, as designated by the United States Postal Service.

2) *ADVERTISING VEHICLE:* Any vehicle and or trailer used as a vehicle to which a sign is affixed in such a manner that the carrying of the sign is used for advertisement or is otherwise not incidental to its primary purpose.

3) *AWNING SIGN:* Any sign painted on or applied to a structure made of cloth, canvas, metal or similar material, which is affixed to a building and projects from it.

4) *BANNER:* A temporary sign with or without characters, letters or illustrations applied to cloth, paper, fabric or other non-rigid material.

5) *BILLBOARD AND/OR OUTDOOR ADVERTISING SIGN:* A sign displaying changeable advertising copy, which pertains to a business, organization, event, person, place, service or product not principally located or sold on the premises upon which said sign is located.

6) *CANOPY:* A freestanding rigid multi-sided structure covered with fabric, metal or other material and supported by columns or posts embedded in the ground.

7) *CIVIC EVENT SIGN, OFF-PREMISE:* A non-commercial temporary sign posted off premise to promote and advertise an activity sponsored by the

DRAFT

Municipality, school district, church, public agency, civic or charitable association or other similar non-commercial organization.

8) *CIVIC EVENT SIGN, ON-PREMISE:* A non-commercial temporary sign, posted to promote and advertise an activity sponsored by the Municipality, school district, church, public agency, civic or charitable association or other similar non-commercial organization on the premise where the event is to be held.

9) *COPY:* Those letters, numerals, figures, symbols, logos and graphic elements comprising the content or message of a sign, excluding numerals identifying a street address only.

10) *DEVELOPMENT SIGN:* A temporary sign indicating that the premises is in the process of subdivision or development which provides the name or names of principal contractors, architects, lending institutions, artisans or parties responsible for the development of the site where the sign is placed.

11) *DIRECTIONAL SIGN, OFF-PREMISE:* A sign that directs or instructs vehicular or pedestrian traffic off the premise relative to the parking area, entrances and exits. Such sign shall contain no advertising other than the business name or logo.

12) *DIRECTIONAL SIGN, ON-PREMISE:* An on-premise sign designed to guide vehicular and/or pedestrian traffic by using such words as “Entrance”, “Exit”, “Parking”, “One-Way”, or similar direction or instruction, but not including any advertising message.

13) *DIRECTORY SIGN:* A sign which identifies multiple uses in a planned non-residential development, shopping center or multi-tenant development on a single sign; may be used for shopping centers, industrial park or business campuses, and similar large complexes which have a variety of tenants and/or uses.

14) *DOUBLE-FACED SIGN:* A sign with two (2) faces of equal sign area, which are back to back.

15) *ELECTRONIC MESSAGE CENTER:* A secondary sign, with a black background or face that includes provisions for changeable copy, PENNDOT-approved color and foot-candle illumination, advertising an on-site product, service, activity, a public service message and/or time and temperature.

16) *FREE STANDING SIGN:* A sign principally supported by a structure affixed to the ground, and not supported by a building, including signs supported by one or more, awnings, columns, poles or braces placed in or upon the ground.

17) *GROUND SIGN:* A freestanding *sign* with no visible support—SEE: Monument Sign

18) *HISTORICAL MARKER/PLAQUE/TABLET/ SIGN*: A marker, plaque, tablet, or sign that memorializes an event, person, building or structure of historical importance.

DRAFT

19) *ILLUMINATED SIGN:* A non-flashing or non-twinkling sign which has letters, figures, designs or outlines illuminated by an internal or external lighting source as part of the sign.

20) *MANUAL MESSAGE CENTER:* A type of sign where a person must manually change the message in the message center.

21) *MEMORIAL SIGN:* A memorial plaque or tablet, to include grave markers or other remembrances of persons or events, which is not for commercial or advertising purposes.

22) *MONUMENT SIGN:* A freestanding sign supported primarily by an internal structural framework or integral structural framework or integrated into landscaping or other solid structural features other than support poles.

23) *MOVABLE SIGN:* Any temporary sign not permanently attached to the ground or other permanent structure, or a sign designed to be transported, including, but not limited to, signs designed to be transported by means of wheels and signs converted to A or T frames. This definition does not include sandwich board signs.

24) *MURAL:* Artwork applied to the wall of a building*, which* covers all or most of the wall that depicts a scene or event of natural, social, cultural, or historical significance.

25) *NAMEPLATE SIGN:* A sign not internally illuminated which identifies the name and/or address of the occupant of the premise or a name of the building.

26) *NEON SIGN:* Any sign composed of glass tubing containing a large proportion of neon gas. A neon sign may be a wall sign, a projecting sign or a window sign.

27) *NONCONFORMING SIGN:* Any sign that does not conform to the requirements of this Ordinance and was legally erected prior to adoption of this Ordinance.

28) *PENNANT:* Any lightweight plastic, fabric or other material, whether or not containing a message of any kind, suspended from a rope, wire or string, usually in a series and designed to move in the wind. A Pennant is considered a Temporary Sign.

29) *PERSONAL EXPRESSION SIGN:* Any sign that expresses an opinion, interest or position, not including political signs.

30) *POLE/PYLON SIGN:* A sign, which is detached from a building and supported by no more than two poles or other structural supports, which are architecturally dissimilar to the design of the sign.

31) *POLITICAL SIGN:* A temporary sign relating to the election of a person to a public office or a political party or a matter to be voted upon at an election by the public.

32) *PROJECTING SIGN:* A sign attached directly to the primary structure that shall not extend more than three (3) feet from the wall and shall clear the grade by at least ten (10) feet or fourteen (14) feet six (6) inches above a vehicular accessible area.

DRAFT

33) *PUBLIC INTEREST SIGN:* A sign on private or public property that displays information pertinent to the safety or legal responsibilities of the public, for example, "warning" and "no trespassing" signs.

34) *PYLON SIGN:* See *"Pole Sign".*

35) *REAL ESTATE SIGN:* A temporary sign indicating the sale, rental or lease of the premises on which the sign is placed.

36) *RESIDENTIAL PLAN IDENTIFICATION SIGN:* Any sign used to identify the name of a residential development containing no commercial message and located at the principal entrances of such development.

37) *REVOLVING SIGN:* A sign, which revolves in a circular motion rather than remaining stationary on its supporting structure.

38) *ROOF SIGN:* Any sign erected and constructed wholly on the roof of a building, supported by the roof structure.

39) *SANDWICH BOARD:* A temporary movable sign consisting of two (2) faces connected and hinged at the top.

40) *TEMPORARY EVENT DISPLAY:* A temporary movable display such as an inflatable balloon, character, tent or vehicle.

41) *TEMPORARY SIGN*: A sign, which advertises community or civic projects, construction projects, real estate for sale or lease or other special events on a temporary basis. To include, but not limited to: banners, pennants, sandwich boards, pole spinners, yard sale signs, etc. A temporary sign is any sign not permanently attached to the ground, wall or building, that is intended to be displayed for a short and limited period of time. Temporary Signs are typically constructed from pliable, non-rigid material (paper, cardboard, canvass, vinyl, etc.), but can also be fabricated from plywood or plastic.

42) *THREE-DIMENSIONAL SIGN:* A sign having length, width and depth and including spheres. A rectangular or square sign with a thickness of less than twelve (12) inches is not considered a three-dimensional sign.

43) *WALL SIGN:* A sign attached to and erected parallel to the face of an outside wall of a building, projecting outward not more than twelve (12) inches from the wall of the building, including a marquee.

44) *WINDOW SIGN:* Any sign, logo, picture, symbol or combination thereof, designed to communicate information about an activity, business, commodity, event, sale or service that is placed inside a window or upon the windowpanes or glass and is visible from the exterior of the window.

45) *YARD SALE SIGN:* A temporary sign advertising a yard or garage sale.

SIGN COPY: Those letters, numerals, figures, symbols, logos and graphic elements comprising the content or message of a sign, excluding numerals identifying a street address only.

DRAFT

SIGN FACE: The entire area on which graphic or written materials or information is placed for viewing in a single direction, not including structural supports, architectural features of a building, or sign structure, nonstructural or decorative trim.

SIGN HEIGHT: The distance from the highest portion of the sign, including all structural elements, to grade.

SIGN STRUCTURE: A supporting structure erected and used for the purpose of a sign, situated on any premises where a sign may be located. This definition shall not include a building, fence, wall or earthen berm.

SIGNIFICANT STAND OF TREES: An aggregation of trees occupying a specific area and sufficiently uniform in species composition, size, age, arrangement, and condition as to be distinguished from the forest or other growth on adjoining areas.

SINGLE-FAMILY RESIDENCE: A detached structure having accommodations for and occupied by not more than one family.

SITE: Any plot or parcel of land. The area where municipal waste processing or disposal facilities are operated. If the operator has a permit to conduct the activities, and is operating within the boundaries of the permit, the site is equivalent to the permit area.

SITE PLAN: A plan prepared by a Surveyor, Engineer, Landscape Architect or Architect for a zoning approval which includes all requirements set forth in this ordinance.

SKIDDING: The process of dragging trees on the ground, by any means necessary, from the harvest area to the landing area.

SKID TRAIL: The trail, path, temporary roadway, or any other unencumbered route, utilized by the timber harvesting operator to move felled trees form the harvest area to the landing area.

SKILLED NURSING FACILITY: Also See: *"Assisted Living Facility", "Continuing Care Facility", "Group Home", "Hospice", "Nursing Home Facility", "Personal Care Home Facility".* A facility which provides nursing care and related medical or other health services for a period of 24 hours or more for two or more individuals not in need of hospitalization but who, because of age, illness, or other infirmity, require high-intensity comprehensive planned nursing care, as defined in current state licensure requirements. The terms shall not include hospitals, psychiatric hospitals, or alcohol and drug abuse rehabilitation centers.

SLASH: The woody debris left on the land after timber harvesting, including logs, chunks, bark, branches, uprooted stumps, and broken or uprooted trees or shrubs.

SLOPE: Inclination of land expressed as a percentage and derived by dividing the vertical elevation change by the horizontal distance.

SOLAR-BASED ARCHITECTURAL ELEMENT: Structural/architectural element that provides protection from weather that includes awnings, canopies, porches or sunshades and that is constructed with the primary covering consisting of solar PV modules and may or may not include additional solar PV related equipment.

SOLAR ENERGY FACILITY: An electric generating facility, with the purpose of electricity supply, consisting of one or more solar panels and other ancillary associated buildings and structures, including substations, meteorological towers, electrical infrastructure, transmission lines, and other appurtenant structures and facilities.

DRAFT

SOLAR PHOTOVOLTAIC (PV) RELATED EQUIPMENT: Items including a solar photovoltaic cell, panel or array, lines, mounting brackets, framing and foundations used for or intended to be used for collection of solar energy.

SOLAR PHOTOVOLTAIC SYSTEM: A solar collection system consisting of one (1) or more building and or ground mounted systems, solar photovoltaic cells, panels or arrays and solar related equipment that rely upon solar radiation as an energy source for the collection, inversion, storage and distribution of solar energy generation. A solar PV system is a generation system with a name plate capacity of not greater than fifty (50) kilowatts if installed at a residential service, or not larger than three thousand (3,000) kilowatts at other customer service locations, and do not produce excess on-site energy greater than currently permitted by the Pennsylvania Public Utility Commission guidelines.

SOLID WASTE: Waste, including, but not limited to, municipal, residual or hazardous wastes, including solid, liquid, semisolid or contained gaseous materials.

SOUND-LEVEL METER: An instrument standardized by the American Standards Association for measurement of intensity of sound.

SPECIAL EXCEPTION: A use permitted in a particular zoning district pursuant to the provisions of §1211.

SPECIAL FLOOD HAZARD AREA (SFHA): An area in the floodplain subject to a one percent (1%) or greater chance of flooding in any given year. It is shown on the FIRM as Zone A, AO, A1-A30, AE, A99, or, AH.

SPECIFIED ANATOMICAL AREAS: The male genitals in a state of sexual arousal and/or the vulva or more intimate parts of the female genitals.

SPECIFIED SEXUAL ACTIVITIES: Includes any of the following:

1) The fondling or other erotic touching of human genitals, pubic region, buttocks, anus, or female breasts;

2) Sex acts, normal or perverted, actual or simulated, including intercourse, oral copulation, or sodomy;

3) Masturbation, actual or simulated; or

4) Excretory functions as part of or in connection with any of the activities set forth in 1 through 3 above.

SPORTS FACILITY: Enclosed areas of sports pavilions, stadiums, gymnasiums, health spas, boxing arenas, swimming pools, roller and ice rinks, billiard halls, bowling alleys, and other similar places where members of the general public assemble to engage in physical exercise, participate in athletic competition, or witness sporting events. Also see: *"Athletic Facility," "Day Spa", "Fitness Center", "Gymnasium", "Membership Club", "Recreational Facility".*

STABLE: Any accessory building in which horses are kept for riding, driving, stabling for private use and not for hire or sale.

START OF CONSTRUCTION: For floodplain management purposes, "start of construction" includes substantial improvement and other proposed new development and means the date the

DRAFT

Permit was issued, provided the actual start of construction, repair, reconstruction, rehabilitation, addition, placement, or other improvement was within 180 days after the date of the permit and shall be completed within twelve (12) months after the date of issuance of the permit unless a time extension is granted in writing by the Floodplain Administrator. The actual start means either the first placement of permanent construction of a structure on a site, such as the pouring of slab or footings, the installation of piles, the construction of columns, or any work beyond the stage of excavation; or the placement of a manufactured home on a foundation. Permanent construction does not include land preparation, such as clearing, grading, and filling; nor does it include the installation of streets and walkways; nor does it include excavation for a basement, footings; piers, or foundations or the erection of temporary forms: nor does it include the installation on the property of accessory buildings, such as garages or sheds not occupied as dwelling units or not part of the main structure. For a substantial improvement, the actual start of construction means the first alteration of any wall, ceiling, floor, or other structural part of a building, whether or not that alteration affects the external dimensions of the building.

STOOP: A flat area at the front door of a house, often with steps below.

STORAGE (TEMPORARY): See: *"Portable Storage Unit".*

STORY: That portion of a *building* included between the upper surface of a floor and the lower surface of the floor or roof next above.

STEALTH TECHNOLOGY: Camouflaging methods applied to wireless communications towers, antennae, and other facilities, not necessarily related to wireless communications facilities, which render them more visually appealing or blend the proposed facility into the existing structure or visual backdrop in such a manner as to render it minimally visible to the casual observer. Such methods include, but are not limited to, architecturally screened roof-mounted antennae, building-mounted antennae painted to match the existing structure and facilities constructed to resemble trees, shrubs, and light poles.

STEEP SLOPE: Land area where the inclination of the land's surface from the horizontal plane is 15% or greater. Man-made slopes shall not be considered steep slopes.

STORY: That portion of a building included between the surface of any floor and the surface of the floor next above it, or if there is no floor above it, then the space between the floor and the ceiling next above it.

STREAM: See: *"Watercourse".*

STREET: A right-of-way intended primarily for vehicular traffic and usually providing for utilities and pedestrian travel. A street may be designated by other appropriate names such as highway, thoroughfare, boulevard, parkway, road, avenue, drive, lane, or place.

STREET, ARTERIAL: Streets, which are used primarily for through, fast traffic at high volumes.

1) *Minor Arterials:* Interconnects with and augments principal arterials; accommodates trips of moderate length; distributes travel to areas smaller than identified with higher systems; places emphasis on land access and offers lower traffic mobility; and spacing is normally not more than one mile. (Ex: Center Road, Haymaker Road, James Street, Monroeville Boulevard, Monroeville Road, Northern Pike, Old William Penn Highway, Pitcairn Road, Stroschein Road, Thompson Run Road, Wilmerding-Monroeville Road).

DRAFT

2) *Principal Arterials:* Serves major centers of activity and carries high proportion of area travel even though it constitutes a relatively small percentage of the total roadway network; integrates both internally and between major rural connections; carries most trips entering and leaving the area and serves intra-area travel; provides continuity for rural arterials; and spacing is related to trip-end density characteristics. (Ex: Broadway Boulevard/Route 130, Golden Mile Highway/Route 286, Mosside Boulevard/Route 48, William Penn Highway/Route 22).

STREET, COLLECTOR: A street that provides both land access services and traffic circulation; distributes trips from arterials through residential neighborhoods to ultimate destination; and collects traffic from local streets and channels it to arterials.

STREET, LOCAL:

STREET, PAPER: A street that has never been built shown on an approved plan, subdivision plat, tax map or official map.

STREETSCAPE: The space formed by buildings located close to the street, which is embellished with such features as sidewalks, street trees, streetlights, curbs, on-street parking, benches, and waste receptacles and cartways.

STREETSCAPE PLAN: A plan adopted by the Municipality of Monroeville by Resolution 03-63 on July 8, 2003 for the beautification of the Route 22 Business Corridor.

STRUCTURE: Any man-made assembly, including mobile objects, having an ascertainable stationary location on or in land or water, whether or not affixed to the land, including buildings, billboards, carports, cranes, earth formation, overhead transmission lines, porches, patios, smokestacks and other building features, but not including sidewalks and driveways. A walled and roofed building, including a gas or liquid storage tank that is principally above ground, as well as a manufactured home.

STUDIO: (1) The workshop of an artist, sculptor, photographer, or craftsperson; (2) a place for radio or television production; and (3) a place where movies are produced.

STUDIO APARTMENT: A one-bedroom efficiency dwelling used as a single housekeeping unit, containing complete kitchen, bathroom and toilet facilities.

SUBSTANCE ABUSE TREATMENT FACILITY: Also see: *"Methadone Treatment Facility"* An establishment where medical or psychotherapeutic treatment for dependency on psychoactive substances such as alcohol, prescription drugs, and street drugs such as cannabis, cocaine, heroin or amphetamines occurs.

SUBDIVISION: The division or re-division of a lot, tract, or parcel of land by any means into two (2) or more lots, tracts, parcels, or other division of land, including changes in existing lot lines for the purpose, whether immediate or future, of lease, partition by the court for distribution to heirs or devisees, transfer or ownership, or building, or lot development; provided however, that the subdivision by lease of land for agricultural purposes into parcels of more than ten (10) acres, not involving any new street, easement or access or any residential dwelling shall be exempted.

SUBDIVISION AND LAND DEVELOPMENT ORDINANCE (SALDO): The Municipality of Monroeville Subdivision and Land Development Ordinance. Ordinance 2525 adopted November 9, 2011.

DRAFT

SUBSTANTIALLY CHANGE OR SUBSTANTIAL CHANGE: A modification to an existing wireless communications facility Substantially Changes the physical dimensions of a tower or base station if it meets any of the following criteria:

1) For Communications Tower outside the public rights-of-way, it increases the height of the facility by more than 10%, or by the height of one additional antenna array with separation from the nearest existing antenna, not to exceed 20 feet, whichever is greater; for Communications Towers in the rights-of-way, it increases the height of the facility by more than 10% or 10 feet, whichever is greater;

2) For Communications Tower outside the public rights-of-way, it protrudes from the edge of the WCF by more than 20 feet, or more than the width of the Tower structures are the level off the appurtenance, whichever is greater; for those Communications Tower in the public rights-of-way, it protrudes from the edge of the structure by more than 6 feet;

3) It involves installation of more than the standard number of new equipment cabinets for the technology involved. but not to exceed 4 cabinets;

4) It entails any excavation of deployment outside the current site of the Communications Tower; or

5) It does not comply with conditions associated with prior approval of construction or modification of the Communications Tower unless the non-compliance is due to an increase in height, increase in width, or addition of cabinets.

SUBSTANTIAL DAMAGE: Damage from any cause sustained by a structure whereby the cost of restoring the structure to its before-damaged conditions would equal or exceeds fifty percent (50%) or more of the market value of the structure before the damage occurred.

SUBSTANTIAL ENLARGEMENT OF A SEXUALLY ORIENTED BUSINESS: The increase in floor areas occupied by the business by more than twenty-five percent (25%), as the floor areas exist on the date of enactment of this ordinance.

SUBSTANTIAL IMPROVEMENT: Any reconstruction, rehabilitation, addition, or other improvement of a structure, of which the cost equals or exceeds fifty (50%) of the market value of the structure before the "start of construction" of the improvement. This term includes structures which have incurred "substantial damage" (or "repetitive loss" when a repetitive loss provision is used) regardless of the actual repair work performed. The term does not, however, include any project for improvement of a structure to correct existing violations of state or local health, sanitary, or safety code specifications which have been identified by the local code enforcement official and which are the minimum necessary to assure safe living conditions.

Historic structures undergoing repair or rehabilitation that would constitute a substantial improvement as defined in this ordinance, must comply with all ordinance requirements that do not preclude the structure's continued designation as a historic structure. Documentation that a specific ordinance requirement will cause removal of the structure from the National Register of Historic Places or the State Inventory of Historic places must be obtained from the Secretary of the Interior or the State Historic Preservation Officer. Any exemption from ordinance requirements will be the minimum necessary to preserve the historic character and design of the structure.

SURVEYOR: A surveyor registered by the Commonwealth of Pennsylvania.

DRAFT

SYNAGOGUE: The building where a Jewish assembly or congregation meets for religious worship and instruction. Also see: *"Place of Worship."*

SWIMMING POOL: A container of water over twenty-four (24) inches in depth, which is used, or intended to be used, for swimming or recreational bathing. This definition includes in-ground, above ground, and on-ground swimming pools, hot tubs and spas. As herein defined the term *"Swimming Pool"* shall be deemed to be a structure.

TANDEM: A group of two (2) or more things arranged one behind the other or used or acting in conjunction.

TANNING SALON: A commercial establishment that offers facilities for the browning of skin, when exposed to the sun or some other ultraviolet light source.

TATTOO PARLOR / BODY PIERCING STUDIO: An establishment whose principal business activity, either in terms of operation or as held out to the public, is the practice of one or more of the following: placing of designs, letters, figures, symbols or other marks upon or under the skin of any person, using ink or other substances that result in the permanent coloration of the skin by means of the use of needles or other instruments designed to contact or puncture the skin; and/or the creation of an opening in the body of a person for the purpose of inserting jewelry or other decoration.

TELEPHONE POLE: See: *"Utility Pole".*

TEMPLE: a building devoted to the worship, or regarded as the dwelling place, of a god or gods or other objects of religious reverence. Also see: *"Place of Worship."*

TEMPORARY STRUCTURE: A structure without any foundation or footings that is removed when the designated time period, activity, or use for which the temporary structure was created has ceased.

TEMPORARY USE: A use established for a limited duration with the intent to discontinue such use upon the expiration of the time period. How to limit problematic, recurring temp uses?? Once every 3 months, etc.??

THEATER: A building or part of a building devoted to showing motion pictures or for dramatic, dance, musical, or other live performances.

THERAPEUTIC MASSAGE FACILITY: A facility that employs professional massage therapists to perform professional massage therapy intended to improve the health and wellness of persons and not including any activity or service that could be defined as a sexually oriented business. Also see: *"Massage Parlor."*

THOROUGHFARE: A road or street that leads, at each end, into another street.

TIMBER HARVESTING OR LOGGING: The cutting down and removal of trees and logs to be converted to any forest product or for sale to others or for other purposes. Timber harvesting shall not include the removal of dead or diseased trees or a homeowner cutting on his own property for his own use.

TIMBER HARVESTING/LOGGING OPERATOR: Any individual, partnership, company, firm, association or corporation engaged in timber harvesting, including agents, subcontractors, and employees thereof.

TINY HOME: A dwelling unit placed on a property for occupancy as either a principal or accessory dwelling unit with a habitable floor area between 150 square feet and 400 square feet constructed

DRAFT

with a foundation or on wheels. Tiny houses are regulated by 2018 International Residential Code, Appendix Q "Tiny Houses".

TOP: The upper portion of a felled tree that is unmarketable because of small size, taper, or defect.

TOPOGRAPHIC RELIEF: The vertical distance between the highest natural topographic point on the proposed disposal area and the lowest natural topographic point on the proposed disposal area (i.e., the difference in elevation of the highest natural point and the lowest natural point).

TOPSOIL: The upper, outermost layer of soil, usually the top two (2) inches (5.1 cm) to eight (8) inches (20 cm). It has the highest concentration of organic matter and microorganisms and is where most of the Earth's biological soil activity occurs.

TOWER-BASED WIRELESS COMMUNICATIONS FACILITY (TOWER-BASED WCF): Any structure that is used for the purpose of supporting one or more antennas, including, but not limited to, self-supporting lattice towers, guy towers and monopoles, utility poles and light poles, but excluding structures used for co-location of non-tower WCFs. DAS hub facilities are considered to be tower-based WCFs.

TOWNHOUSE: A row of three (3) or more attached, one-family dwellings, separated by vertical party or lot-line walls, and each having private entrances.

TRACKING SYSTEM: A number of photovoltaic modules mounted such that they track the movement of the sun across the sky to maximize energy production, either with a single-axis or dual-axis mechanism.

TRANSFER OF OWNERSHIP OR CONTROL OF A SEXUALLY ORIENTED BUSINESS: includes any of the following:

1) The sale, lease, or sublease of the business;

2) The transfer of securities which constitute a controlling interest in the business, whether by sale, exchange, or similar means; or

3) The establishment of a trust, gift, or other similar legal device which transfers the ownership or control of the business, except for transfer by bequest or other operation of law upon the death of the person possessing the ownership or control.

TRANSIENT ROOMER: Not lasting, enduring, or permanent; transitory.

TRANSITION AREA: An area that acts as a buffer between two (2) land uses of different intensity and capabilities.

TRANSFER STATION: Any supplemental transportation facility used as an adjunct to solid waste route collection vehicles.

TREE: a woody perennial plant, typically having a single stem or trunk growing to a considerable height and bearing lateral branches at some distance from the ground.

TRI-PLEX: A building that is divided into three living units or residences, usually having separate entrances.

TRUCK: A vehicle registered gross or combination weight in pounds, 17,001 pounds or more as provided by the Pennsylvania Motor Vehicle Code, 75 Pa.C.S.A. § 101 et seq.

DRAFT

TRUCK TERMINAL: Land and buildings used primarily for the storage and maintenance of trucks and/or trailers and/or to transfer freight from one truck and/or trailer to another. The terminal shall not be used for storage of freight. The terminal may include storage areas for trucks, and buildings for the repair of trucks associated with the terminal.

TWO-FAMILY HOME: A detached structure having accommodations for and occupied by not more than two (2) families.

UNCONVENTIONAL WELL: a well that is drilled into an unconventional formation, which is defined as a geological shale formation below the base of the Elk Sandstone or its geologic equivalent, such as Marcellus, Utica, Mandata, Huron, Rhinestreet or Upper Devonian, where natural gas generally cannot be produced except by horizontal or vertical well bores stimulated by hydraulic fracturing.

UNIFORM CONSTRUCTION CODE (UCC): The statewide building code adopted by The Pennsylvania General Assembly in 1999 applicable to new construction in all municipalities whether administered by the Municipality, a third party or the Department of Labor and Industry. Applicable to residential and buildings, the (UCC) adopted The International Residential Code (IRC) and the International Building Code (IBC), by reference, as the construction standard applicable with the Commonwealth of Pennsylvania. For coordination purposes, references to the above are made specifically to various sections of the IRC and the IBC.

UNREGULATED YARD AREA: Area not within a building and not in a defined setback or yard area.

USE: The purpose, for which land, building or a structure is arranged, designed or intended, or for which land, building or a structure is or may be occupied or maintained.

USE, NONCONFORMING: A use that lawfully occupied a structure, land or object of natural growth, which is inconsistent with the provisions of this Ordinance or an amendment thereto.

USE, CHANGE OF: The change within the classified use of a structure or premise.

UTILITY POLE: a column or post used to support overhead power lines and various other public *utilities*, such as electrical cable, fiber optic cable, and related equipment such as transformers and street lights.

UTILITY TERRAIN VEHICLE (UTV): Also See: *"All Terrain Vehicle (ATV)"; Any* motor vehicle, able to seat passengers side by side, and built with storage space, commonly used to haul equipment and supplies in locations that make using a truck impractical or impossible. Any motor vehicle with four or more low-pressure tires designed for off-highway use having bench or bucket seating for each occupant and a steering wheel for control.

VACANT PROPERTY: Any building or structure that is not legally occupied and is not currently being offered for sale, rent or lease, evidence by a sign posted on the property, and /or listed on an electronic database accessible by the Municipality. In lieu of a sign located on the property, a licensed realtor may submit written confirmation that the subject property is listed for sale, rent or lease. This definition shall not apply to properties where owners or occupants are temporarily absent by reason of extended vacation, part-time seasonal residence, illness, temporary employment for a period in excess of ninety (90) days, but intend to return to such property, and have notified the Municipality of their intentions.

DRAFT

VARIANCE: An authorization to vary slightly from the strict interpretation of the standards of this Ordinance, which may be granted by the Zoning Hearing Board in accordance with the law. Also, a grant of relief by a community from the terms of a floodplain management regulation.

VECTOR: A rodent, arthropod or insect capable of transmitting a disease or infection. "Vectors" shall include but not be limited to rats, mosquitoes, cockroaches, flies, and ticks.

VECTOR PROOFING: A form of construction to prevent the ingress or egress of vectors to or from a given space or building or gaining access to food, water, or harborage. This term shall include but not be limited to rat-proofing, fly-proofing and mosquito-proofing.

VEHICLE LEASING / RENTAL OR SALES: The leasing, rental and/or sales of automobiles, mobile homes, trucks, recreational vehicles, farm equipment or similar motor vehicles, which may also include the servicing and maintenance of such vehicles when conducted within a fully enclosed structure.

VEHICLE REPAIR SERVICE GARAGE: A building or structure where the exclusive services performed or executed on motor vehicles for compensation shall include the installation, repair or provision of exhaust systems, electrical systems, transmission, brakes, radiators, tires, rust proofing, motor vehicle diagnostics, lubrication, major and minor mechanical and/or body repairs or similar services, and in conjunction with which there may be a towing service, a motor vehicle fuel service and/or charging station or a motor vehicle rental/leasing as an accessory use.

VEHICLE SALES AREA: The leasing, rental and/or sales of automobiles, mobile homes, trucks, recreational vehicles, or farm equipment on a predominately open lot where no repair work except that which is minor and incidental to the sale of vehicles is performed.

VEHICLE SALESROOM: The leasing, rental and/or sales of automobiles, mobile homes, trucks, recreational vehicles, or farm equipment within an enclosed structure, which may also include the servicing and maintenance of such vehicles when conducted within a fully enclosed structure.

VEHICLE REPAIR SERVICE GARAGE: Any building, premises, and land in which or upon which a business, service, or industry performs or renders a service involving the maintenance, servicing, repair, or painting of vehicles, not including commercial motor vehicle repair.

VEHICLE SERVICES: See: *"Vehicle Repair Service Garage".*

VEHICLE WASH, AUTOMATIC: A structure containing facilities for washing vehicles and automatic or semiautomatic application of cleaner, brushes, rinse water and heat for drying.

VEHICLE WASH, SELF-SERVE: Any commercial building, premises, or portions thereof used for washing vehicles.

VIEWING BOOTHS: Booths, stalls, partitioned portions of a room, rooms or other enclosures which are available for viewing:

1) Films, movies, videos, or visual reproductions of any kind depicting or describing specified sexual activities or specified anatomical areas.

2) Persons who appear in a state of nudity or semi-nudity or who offer performances or presentations characterized by the exposure of specified anatomical areas or by specified sexual activities.

DRAFT

VERNAL POND: An isolated, contained basin depression that holds water for at least two (2) months in the spring and summer, critical to several amphibian, reptile and invertebrate species. It also provides important storage for storm water runoff and spring snowmelt that would otherwise contribute to downstream flooding. A vernal pond is typically no bigger than three hundred (300) feet long and one hundred and twenty (120) feet wide and is often much smaller.

VETERINARY HOSPITAL: A place where animals are given medical and/ or surgical care and the boarding of animals is limited to short-term care incidental to the hospital use.

VIOLATION: For floodplain management purposes, "violation" means the failure of a structure or other development to be fully compliant with the community's floodplain management regulations. A structure or other development without the elevation certificate, other certifications, or other evidence of compliance required in 44 CFR §60.3(b) (5), (c)(4), (c)(10), (d)(3), (e)(2), (e)(4), or (e)(5) is presumed to be in violation until such time as that documentation is provided.

VIOLATION, NOTICE OF: The legal notice issued to a property owner by the Zoning Officer, informing said property owner of any violation of the provisions of this Ordinance.

VOCATIONAL SCHOOL: Also see: *"Educational Institution", "School."* A secondary or higher education facility primarily teaching useable skills that prepare students for jobs in a trade and meeting the state requirements as a vocational facility.

WAREHOUSING, PRIVATE: A building used primarily for the storage of goods and materials by the owner of the goods or operated for a specific establishment or group of establishments in a particular industrial or economic field.

WAREHOUSING, PUBLIC: A building used primarily for the storage of goods and materials and available to the public for a fee.

WATER BODY: Any natural or manmade pond, lake or stream. This shall not include any pond or facility designed and constructed solely to contain storm water.

WATER IMPOUNDMENT – FRESH: A lined depression excavation pit or facility situated in or upon the ground, whether natural or artificial, used to store fresh water.

WATER IMPOUNDMENT – WASTE: A lined depression excavation pit or facility situated in or upon the ground, whether natural or artificial, used to store waste water fluid, including but not limited to brine, fracturing fluid, produced water, recycled water, impaired water, flowback water or any other fluid that does not satisfy the definition of "fresh water".

WATERCOURSE: Any channel of conveyance of surface water having a defined bed and banks, whether natural or artificial, with perennial, intermittent or seasonal flow.

WBCA: The Pennsylvania Wireless Broadband Collocation Act (53 P.S. § 11702.1 et seq.), as amended.

WELL: A bore hole drilled or being drilled for the purpose of or to be used for producing, extracting or injecting any gas, petroleum or other liquid related to oil or gas production or storage, including brine disposal, but excluding bore holes drilled to produce potable water to be used as such.

WELL OPERATOR OR OPERATOR: Any person or entity partnership, company, corporation and its subcontractors and agents who has an interest in real estate for the purpose of exploring or drilling for, producing, or transporting oil or gas. It is also the person or entity designated as the operator on the applicable permit application or well/facility registration.

DRAFT

WELL SITE: The area of surface operations surrounding the surface location of a well or wells. The site can include facilities, structures, materials, water containment devices and equipment, whether permanent or temporary, necessary for or incidental to the preparation, construction, drilling, production or operation of an oil or gas well, including the access road.

WETLAND: Those areas that are inundated or saturated by surface or ground water at a frequency and duration sufficient to support, and that under normal circumstances do support, a prevalence of vegetation typically adapted for life in saturated soil conditions, including swamps, marshes, bogs, fens, and similar areas.

WINDMILL: A wind energy conversion system that converts wind energy into electricity using a wind turbine generator, and includes the nacelle rotor as well as the tower and pad transformer, if any.

WIND ENERGY FACILITY: An electric generating facility, whose main purpose is to supply electricity, consisting of one or more windmills and other accessory structures and buildings, including substations, meteorological towers, electrical infrastructure, transmission lines and other appurtenant structures and facilities.

WIRELESS: Transmissions through the airwaves, including, but not limited to, infrared line-of-sight, cellular, PCS, microwave, satellite, or radio signals.

WIRELESS COMMUNICATIONS FACILITY (WCF): See: *"Tower"* and *"Non-Tower".* The antennas, nodes, control boxes, towers, poles, conduits, ducts, pedestals, electronics and other equipment used for the purpose of transmitting, receiving, distributing, providing, or accommodating wireless communications services for the purpose of telecommunications.

WIRELESS COMMUNICATIONS FACILITY ACCESSORY EQUIPMENT: A structure and/or equipment intended to support wireless communication facilities (WCF). Not included are antennas and supportive structures for private, noncommercial, and amateur purposes, including, but not limited to, ham radios, citizens band radios, wi-fi networks, and other similar facilities installed by property owners for their private use.

WIRELESS COMMUNICATIONS FACILITY APPLICANT (WCF APPLICANT): any person that applies for a wireless communication facility building permit, zoning approval and/or permission to use the public right-of-way (ROW) or other Municipality owned land or property.

WIRELESS SUPPORT STRUCTURE: A freestanding structure, such as a tower-based wireless communications facility or any other support structure that could support the placement or installation of a wireless communications facility if approved by the Municipality.

WOODLAND: A plant community composed predominantly of healthy trees, with a caliper measurement of 3" or more, and other woody vegetation, well-stocked and growing more or less closely together.

YARD: An open space on a lot, unoccupied and unobstructed from the ground to the sky, not occupied by structure or used for parking or storage, except as otherwise provided, and not including any portion of a street or alley. Include a diagram??? see:"Area and Bulk Regulations" CADD file. Remove other defintions for "Yards"

1) *YARD, FRONT:* A yard across the full width of the lot, extending laterally between the side lot lines and from the front line of the structure at the first-floor level to the

DRAFT

front line of the lot. Lots that front on more than one (1) street shall provide the minimum front yard setback from all streets.

2) *YARD, REAR:* A yard across the full width of the lot, measured in depth from the rear property line of the lot to the nearest point of the principal structure of the lot. The rear yard is typically opposite the front yard; however, lots shall only provide one (1) rear yard regardless of the number of front yards. Lots that abut on more than one street shall provide the required front yard along every public or private street. The remaining yards shall be considered side yards.

3) *YARD, SIDE:* The prescribed minimum open space between the front yard line and the rear yard line measured perpendicularly from the side lot line. Any lot line, not a rear lot line or a front lot line shall be deemed as a side lot line.

ZONING APPROVAL: Approval under the provisions of this chapter certifying that an application for development or application for zoning approval for occupancy and use has fulfilled the requirements of this chapter.

ZONING HEARING BOARD (ZHB): See: *"Board".*

ZONING OCCUPANCY CERTIFICATE: A document issued by the Zoning Officer upon completion of the construction of a structure, or change in use of structure or parcel of land, or change of occupancy of structure, that indicates the use and structure is in compliance with the Ordinances of the Municipality having jurisdiction over the location of such use or structure, that all conditions attached to the granting of the Zoning Occupancy Certificate have been met, and that the structure and land may be occupied and used for the purposes set forth in the Zoning Permit.

ZONING OFFICER: The person appointed in accordance with the Monroeville Home Rule Charter. The Zoning Officer shall be the Zoning Officer as required by the Municipalities Planning Code, 53 P.S. §10101 *et seq.* The Zoning Officer shall have all the powers and be subject to the provisions as set forth in the Municipalities Planning Code, 53 P.S. §10101 *et seq.*, with respect to Zoning Officers.

ZONING PERMIT: A document issued by the Zoning Officer stating that a proposed use or development will comply with this Ordinance and authorizing the applicant to proceed to obtain all required building *permit*s.

§203 Fair Housing Act

Notwithstanding any definition or any other provision of this Chapter, no definition or other provision of this Chapter shall be construed, applied or interpreted in a fashion which violates the Federal Fair Housing Act, 42 U.S.C. 3601 *et seq*., and as interpreted by any court of competent and binding jurisdiction.

~ END OF SECTION ~

DRAFT

THIS PAGE INTENTIONALLY LEFT BLANK

DRAFT

ARTICLE III – DISTRICT REGULATIONS

§301 Designation of Zoning Districts
§302 Zoning District Map
§303 Determination and Zoning District Boundaries
§304 Split Lot Zoning
§305 Residential Zoning Districts
§306 Residential Zoning Districts Lot and Yard Requirements
§307 Commercial Zoning Districts
§308 Commercial Zoning Districts Lot and Yard Requirements
§309 Industrial Zoning Districts
§310 Industrial Zoning Districts Lot and Yard Requirements
§311 Special Zoning Districts
§312 Special Zoning Districts Lot and Yard Requirements
§313 Special Zoning Districts Rear and Side Yard Separation Standards
§314 Lots Abutting More Than One Street
§315 Supplemental Lot and Yard Requirements
§316 Supplemental Height Regulations
§317 All Other Uses
§318 Site Plan Review Checklist
§319 Inspection of Site Development Work
§320 Zoning Use Chart

§301 Designation of Zoning Districts

Every parcel, lot, and tract of land within the Municipality of Monroeville is designated with a zoning district. The use of land is limited to the uses allowed by the applicable zoning district and/or overlay zone. The applicable zoning districts and overlay zone(s) are determined based on the Zoning Map and the provisions of this Chapter, which shall be consistent with the Municipality's Comprehensive Plan.

§302 Zoning District Map

A. Consistency with Zoning District Map - Zoning districts identified within this chapter shall coincide with the zoning district boundaries identified on the Municipality's Official Zoning Map, and any amendments to this map, shall be kept and maintained by the Department of Community Development.

B. Applicability of Zoning Standards - Each lot, tract, and parcel of land or portion thereof within the zoning district boundaries designated and marked on the Official Zoning Map, is classified, zoned and limited to the uses hereinafter specified and defined for the applicable zoning district.

§303 Determination of Zoning District Boundaries

A. Where due to the scale, lack of scale, lack of detail or illegibility of the Official Zoning Map, or due to any other reason, there is uncertainty, contradiction or conflict as to the intended location of a district boundary line, the boundary line shall be determined by the Zoning Officer in accordance with all of the following criteria:

1) Rights-of-Way - Boundaries indicated as approximately following the centerlines of streets, highways, railroad tracks, alleys, irrigation canals, bridges, or other right-of-way should be construed to follow such centerlines.

DRAFT

Whenever any public right-of-way is lawfully vacated, the lands formerly within the vacated right-of-way shall automatically be subject to the same zoning district designation that is applicable to lands abutting the vacated areas. In cases where the right-of-way formerly served as a zoning district boundary, the lands within the right-of-way now vacated shall be allocated proportionately among the subject zoning districts;

2) Parcel, lot, tract - Boundaries indicated as approximately following the boundaries of a parcel, *lot*, or tract shall be construed as following such boundaries;

3) Jurisdiction boundary - Boundaries indicated as approximately following a municipal or *county* boundary, shall be construed as following said boundary; and

4) Natural features - Boundaries indicated as approximately following a river, *stream*, drainage channel, drainage basin, topographic contour or other changeable natural feature not corresponding to any feature listed in a subsection above, shall be construed as following such feature.

B. When there is disagreement on the location of zoning district boundaries, a determination shall be made by the Zoning Officer, with appeal from the determination of the Zoning Officer made to the Zoning Hearing Board.

§304 Split Lot Zoning

When a zoning district boundary splits a lot, resulting in differing and non-uniform requirements for the lot, the following provisions shall apply:

A. Where the lot is large enough to be subdivided into two (2) or more lots, each within a single zoning district, the landowner shall request a use variance to utilize any portion of the lot other than that portion of the lot in which the principal use is located. Further development shall require subdivision;

B. Where a lot cannot be subdivided in compliance with this Ordinance and the Subdivision and Land Development Ordinance, the authorized use permitted on the lot is limited to those authorized uses permitted in the zoning district in which the largest part of the lot is located, and the smaller part of the lot located in another zoning district shall be subject to the provisions of this Ordinance where the largest portion of the lot is located. If this section shall create an undue hardship, the Zoning Hearing Board shall have jurisdiction to grant such relief as it deems necessary.

Where to insert these diagrams???

DRAFT

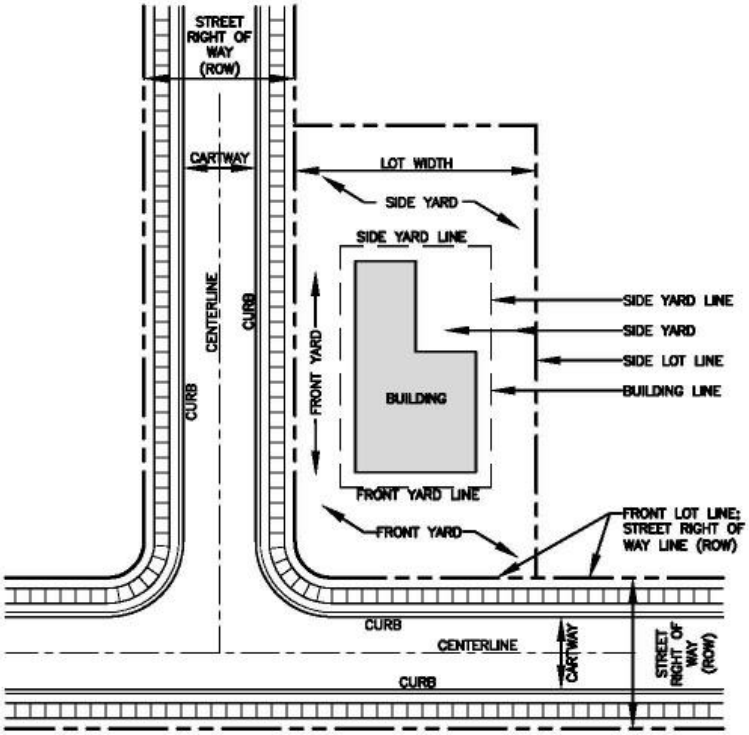

CORNER LOT

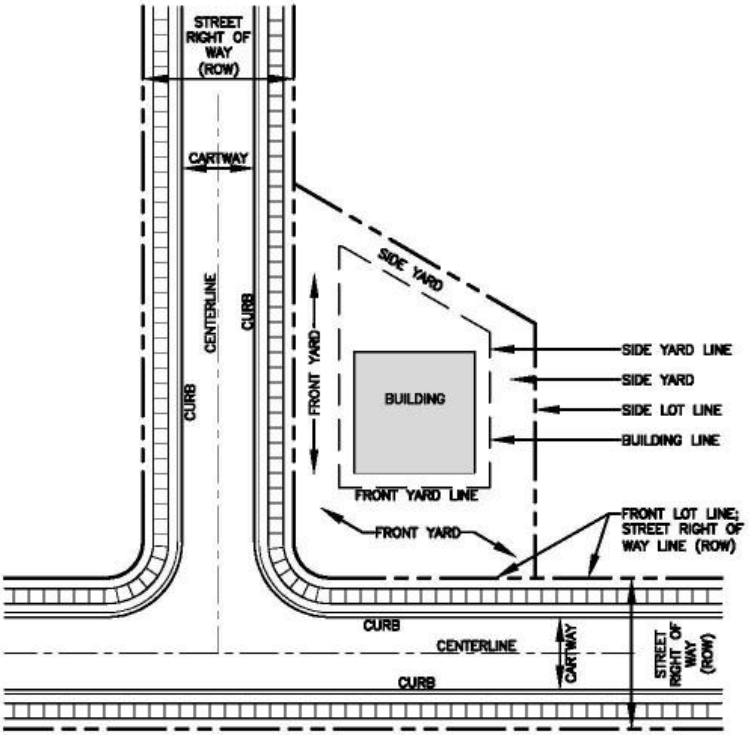

CORNER LOT

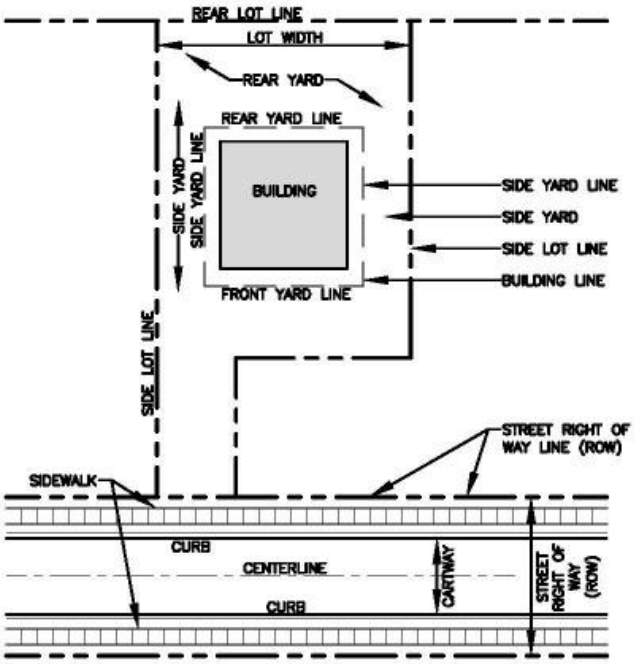
REAR LOT LINE
LOT WIDTH
REAR YARD
REAR YARD LINE
SIDE YARD
SIDE YARD LINE
BUILDING
SIDE YARD LINE
SIDE YARD
SIDE LOT LINE
BUILDING LINE
FRONT YARD LINE
SIDE LOT LINE
STREET RIGHT OF WAY LINE (ROW)
SIDEWALK
CURB
CENTERLINE
CURB
CARTWAY
STREET RIGHT OF WAY (ROW)

FLAG LOT

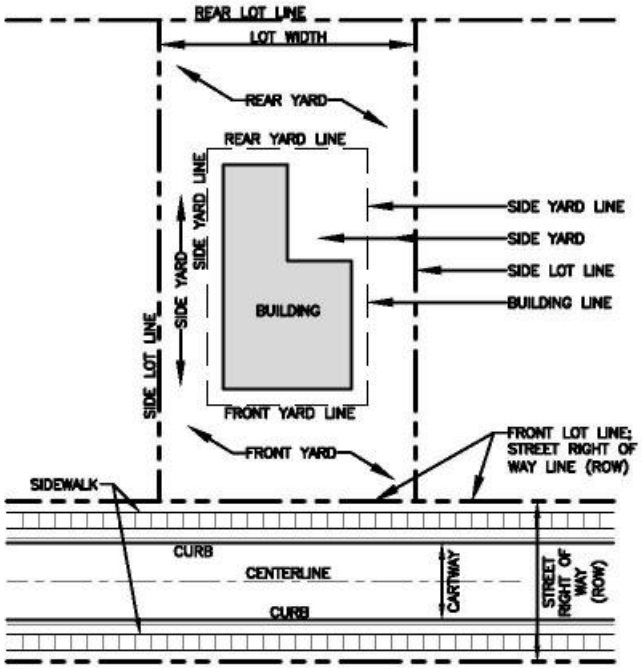

INTERIOR LOT

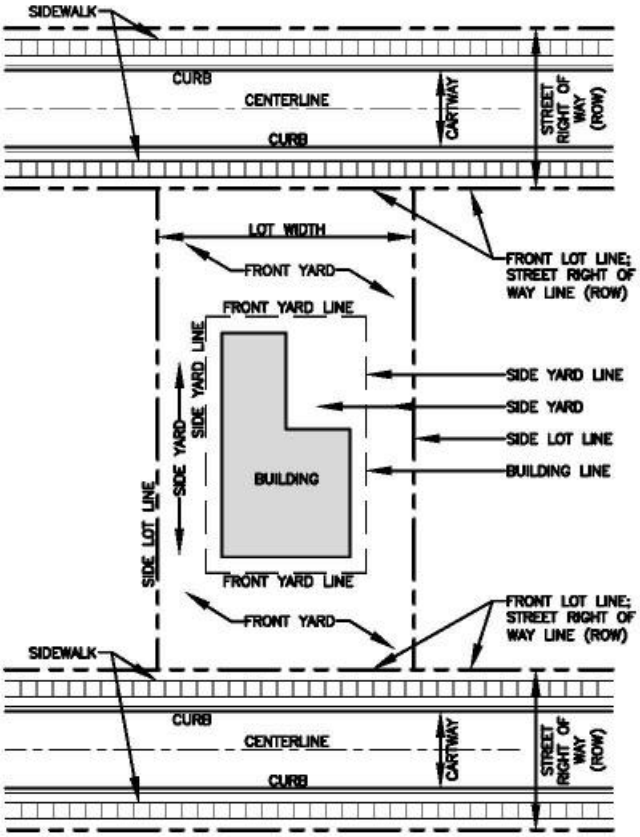

DOUBLE–FRONTAGE / THROUGH LOT

§305 Residential Zoning Districts

The Residential Zoning Districts are intended to promote the livability, stability and improvement of the neighborhoods districts as provided:

A. The **R-1, Single-Family** Residential Zoning District is intended for single family homes on lots of a minimum seven thousand and five hundred (7,500) square feet, typically and characterized by household living with nearby parks, schools, places of worship, and other supportive services that are at an appropriate neighborhood scale. The district requirements promote and protect the quality urban residential living of the existing residential neighborhood;

B. The **R-2, Single/Multi-Family** Residential Zoning District is intended to accommodate single-family homes and two-family homes that are situated along principal arterial and minor arterial roads and adjacent to commercial uses designed to service the surrounding residential neighborhoods. The purpose of the R-2 District is to promote orderly development of the Municipality and encourage well-designed living environments which protect and stabilize the residential characteristics of Monroeville. The District requirements are intended to preserve, promote and protect a quality of urban residential living characterized by unobstructed Front Yards, pedestrian-scale streetscapes and Buildings scaled and designed to be compatible with the neighborhood;

C. The **R-3, Multi-Family** Residential Zoning District is intended to accommodate a variety of low-rise multi-family homes to include but not limited to townhouses, garden apartments and condominiums that are situated along principal arterial and minor arterial roads and adjacent to commercial uses designed to service the surrounding residential neighborhoods. The district requirements are intended to preserve, promote and protect a quality of urban residential living characterized by unobstructed Front Yards, pedestrian-scale streetscapes and Buildings scaled and designed to be compatible with the neighborhood;

D. The **R-4, Multi-Family** Residential Zoning District is intended to accommodate a variety of low and high rise multi-family homes to include but not limited to townhouses, garden apartments and apartment buildings of ten stories in height or less, located along principal arterial and minor arterial roads and convenient to transit services, public uses and commercial businesses. The R-4 District is intended to provide residential areas that accommodate multi-Story, higher density housing while protecting, maintaining and enhancing existing residential character. The district adds to the urban character of Monroeville and provides diversity in housing types;

E. Section 320, Zoning Use Chart, identifies land use categories that are permitted in the Residential Zoning Districts;

F. Accessory Structure(s): The maximum allowable square footage of accessory structure(s) shall not exceed twenty percent (20%) of the total square footage of the primary structure or exceed five hundred (500) square feet. There shall be no more than two (2) accessory structures on a lot. These restrictions do not apply to agricultural use accessory structures;

DRAFT

G. In every residential development other than a development of less than 10 acres, one-family detached houses the developer shall provide recreational facilities ~~approved~~ recommended by the Planning Agency as appropriate to the population to be housed in such development. Reference Ordinance 2525 (SALDO) section 004-17. Parks, Open Space, and Recreation Facilities;

H. In any residential development other than one-family the developer shall provide a pedestrian circulation system which, as a minimum, shall be comprised of sidewalks not less than four feet in width located along public streets. The pedestrian circulation system in a planned development shall be a part of the development plan; Refer to Article VI and SALDO Ord. 2525 for specific sidewalk requirements.

I. In any one-family attached or garden apartment development differing setbacks, roof lines and first floor elevations may be required in order to best adapt to the specific topography of the site, however, the minimum setbacks as set forth in this ordinance shall be followed;

J. In every residential development all required yards will be permanently maintained with grass planting, or other acceptable landscape planting, as determined by the Planning Commission;

K. The floor area for every dwelling unit shall not be less than one thousand (1,000) square feet for a one-family dwelling, a two-family dwelling or a one-family attached dwelling. In multiple family structures other than one-family attached units, the floor area per dwelling unit shall not be less than seven hundred and fifty (750) square feet for a unit having three or more bedrooms; six hundred (600) square feet for a unit having two bedrooms; or four hundred and fifty (450) square feet for a unit having one bedroom or for an efficiency apartment. The floor area shall not be less than eight hundred (800) square feet for a mobile home;

L. STREETLIGHTS — Reference the Subdivision and Land Development Ordinance (SALDO) for specific standards and details.

§306 Residential Zoning Districts Lot and Yard Requirements

A. Structures shall meet the Minimum Lot Area, Minimum Lot Frontage, Minimum Lot Width, Minimum Front Yard, Minimum Side Yard, and Minimum Rear Yard that are established in Table 301, except as provided hereinafter;

B. No structure shall exceed the maximum height above grade as provided in Table 301, except as provided in §316;

Table 301. Lot and Dimensional Requirements, Residential Zoning Districts.

	R-1	R-2	R-3	R-4
Minimum Lot Area	~~7,500~~ 10,000 SF	7,500 SF	7,500 SF	10,000 SF
Minimum Lot Width	~~60~~ 75 feet	60 feet	60 feet	75 feet
Minimum Lot Frontage	~~40~~ 50 feet	40 feet	40 feet	60 feet
Minimum Front Yard	30 feet	30 feet	30 feet	40 feet
Minimum Side Yard	~~10~~ 15 feet	10 feet	10 feet	20 feet

DRAFT

Minimum Rear Yard	40 feet	40 feet	40 feet	40 feet
Maximum Height	35 feet	35 feet	60 feet	100 feet

C. Density and Floor Area Requirements

1) The minimum lot area for each dwelling unit is specified in Table 302:

Table 302. Density of Development Limits

	R-1	**R-2**	**R-3**	**R-4**
Single-Family Home	7,500 SF	7,500 SF	7,500 SF	10,000 SF
Two-Family Home	N/A	4,375 SF	4,375 SF	4,375 SF
Townhouse	N/A	3,200 SF	3,200 SF	3,200 SF
Garden **Apartment**	N/A	2,400 SF	2,400 SF	2,400 SF
Apartment	N/A	N/A	N/A	1,200 SF

2) The maximum floor area ratio for residential uses is specified in Table 303:

Table 303. Maximum Floor Area to Lot Area Ratio

	R-1	**R-2**	**R-3**	**R-4**
Under Four Stories	.30	.33	.40	.50
Four Stories	N/A	N/A	.50	.60
Five Stories	N/A	N/A	.60	.70
Six Stories	N/A	N/A	.70	.80
Seven Stories	N/A	N/A	N/A	.90
Eight Stories	N/A	N/A	N/A	1.00
Nine Stories	N/A	N/A	N/A	1.10
Ten or More Stories	N/A	N/A	N/A	1.20

§307 Commercial Zoning Districts

A. The **C-1, Neighborhood Commercial** Zoning District is intended to accommodate the shopping, service and family needs of nearby medium to high-density residential neighborhoods and a localized area. Small in size, these shops, stores and offices are conveniently situated adjacent to collector and major arterial roads. The intent of the District is to provide locations to accommodate general retail, service, finance, insurance and real estate and related Structures and Uses. Proximity to residences requires that commercial operations in the C-1 District are low intensity, unobtrusive and conducted at a scale and density compatible with the surrounding neighborhood. There is a relatively low demand on public services, transportation and utilities.

DRAFT

B. The **C-2, Business Commercial** Zoning District is intended as the core commercial area to accommodate the development of a broad spectrum of commercial and business uses that serve not only the local residents but also attract a large regional population. This designated commercial area is situated to be adjacent or within close proximity to principal arterial highways, expressways and interstate interchange areas. The C-2 District is preserved through appropriate design elements, amenities or treatments that create, enhance and reinforce the design relationships between the Buildings, sites and Streets and still establish an ambience that is uniquely urban.

C. The **C-3, Mixed-Use** Zoning District is intended to accommodate a mix of residential, commercial, public, institutional uses and associated professional and support services that will be utilized not only by the local residents but the regional population at large. This designated mixed-use area is in close proximity to principal arterial highways, expressways and interstate interchange areas. The C-3, Mixed-Use Zoning District blends mutually supportive uses, including, but not limited to, some combination of residential, commercial, cultural, institutional, recreational and public uses. The C-3, Mixed-Use Zoning District permits apartments on a second floor or above of commercial Structures. The purposes of mixed-use development include the allowance of greater housing variety and density, the reduction of distance between housing, workplaces, retail businesses, and other destinations, the encouragement of more compact development, the strengthening of neighborhood character, and the promotion of pedestrian and bicycle friendly environments that reduce the need for motorized vehicles and related facilities, e.g. parking lots and structures.

D. The **L, Special-Use** Zoning District is intended to accommodate office complexes on vast parcels, developed as a planned group unit and designed to encourage quality development in a campus like atmosphere. Because of the low intensity development of the land and rigorous design standards, the Special Use Zoning District can be located within or adjacent to the residential areas in the community and on minor arterial and collector roadways.

E. Section 320, Zoning Use Chart, identifies land use categories that are permitted in the Commercial Zoning Districts;

F. Uses not shown as Permitted Uses, Conditional Uses or uses by Special Exception are prohibited;

G. All structures on lots located in any Commercial Zoning District shall receive Land Development approval from Council.

H. Accessory Structure(s): The maximum allowable square footage of accessory structure(s) shall not exceed twenty percent (20%) of the total square footage of the primary structure or exceed five hundred (500) square feet. There shall be no more than two (2) accessory structures on a lot.

§308 Commercial Zoning Districts Lot and Yard Requirements

A. Structures shall meet Minimum Front Yard, Minimum Side Yard, Minimum Rear Yard and Building setback that are established in Table 304.

B. No structure shall exceed the maximum height above grade as provided in Table 304, except as provided in §316.

Table 304. Lot and Dimensional Requirements, Commercial Zoning Districts.

DRAFT

	C-1	C-2	C-3	L
Minimum Front Yard	10 feet	10 feet	10 feet	35 feet
Minimum Side Yard	15 feet	15 feet	15 feet	15 feet
Minimum Rear Yard	15 feet	0 feet	25 feet	10 feet
Maximum Height	30 feet	45 feet	75 feet	45 feet
Building Setback	40 feet	40 feet	40 feet	40 feet
Minimum Lot Size	5,000 sq ft	2,500 sq ft	5,000 sq ft	1.0 acre

§309 Industrial Zoning Districts

A. The **M-1, Planned Industrial** Zoning District is intended to accommodate the primarily light industrial uses in a planned group unit setting serviced by a system of interconnecting interior roadways. All business activities are carried out within the light industrial structures and may include warehouse uses, manufacturing, distribution centers and service businesses. Drawing from a regional market for employees, and an importer and exporter of goods, the district should be located within close proximity of principal arterial highways, expressways or interstate interchange areas;

B. The **M-2 Heavy Industrial** Zoning District is intended for use by large manufacturing operations, heavy equipment facilities, construction and maintenance yards, fuel businesses and other basic intensive industrial activities normally found in an urban environment with immediate access to principal arterial highways, expressways or interstate interchange areas and other modes of transportation such as truck terminals, rail lines and airports;

C. Appendix I (Use Table and Definitions) identifies land use categories that are permitted in the Industrial Zoning Districts;

D. Uses not shown as Permitted Uses, Conditional Uses or Uses by Special Exception are prohibited;

E. All structures on lots located in any Industrial Zoning District shall receive Land Development approval from Council.

F. Accessory Structure(s): The maximum allowable square footage of accessory structure(s) shall not exceed twenty percent (20%) of the total square footage of the primary structure or exceed five hundred (500) square feet. There shall be no more than two (2) accessory structures on a lot.

§310 Industrial Zoning Districts Lot and Yard Requirements

A. Structures shall meet the Minimum Front Yard, Minimum Side Yard, Minimum Rear Yard and Building setback that are established in Table 305;

B. No structure shall exceed the maximum height above grade as provided in Table 305, except as provided in §316.

Table 305. Lot and Dimensional Requirements, Industrial Zoning Districts.

DRAFT

	M-1	M-2
Minimum Front Yard	40 SF	30 SF
Minimum Side Yard	20 SF	20 SF
Minimum Rear Yard	20 SF	20 SF
Maximum Height	45 SF	85 SF
Building Setback	40 SF	40 SF
Minimum Lot Size	1.0 acre	1.0 acre

§311 Special Zoning Districts

A. The **S, Conservancy** Zoning District is intended to provide the conservation of open space and the preservation of environmentally sensitive areas throughout the Municipality;

B. The **LF, Landfill** Zoning District is intended to provide for control over the locations of both public and private landfills and their design, use, reuse and reclamation, and to provide transition areas adjacent to landfills facilitating the transition from landfills and landfill-related uses to other types of land uses;

C. The **BLVD, Boulevard** Zoning District is intended to encourage a mix of residential and commercial development that addresses the needs of the local and regional population. The mixed-use development will be compatible with adjacent residential or commercial areas. The designated areas are situated adjacent to minor arterial or principal arterial roadways. The BLVD, Boulevard Zoning District provides diverse commercial development along gateway transportation corridors and neighborhoods. The BLVD, Boulevard Zoning District permits apartments on a second floor or above commercial Structures. The District includes a dense mixture of Uses such as housing, retail and other complementary Uses that serve the adjacent neighborhood and the community as a whole. The BLVD District is preserved through appropriate design elements, amenities or treatments that create, enhance and reinforce the design relationships between the buildings, sites and Streets and still establish an ambience that is uniquely urban.

D. Section 320, Zoning Use Chart, land use categories that are permitted in the Special Zoning Districts;

E. Uses not shown as Permitted Uses, Conditional Uses or Uses by Special Exception are prohibited;

F. Accessory structure - The maximum allowable square footage of accessory structure(s) shall not exceed twenty percent (20%) of the total square footage of the primary structure, not to exceed five hundred (500) square feet. There shall be no more than two (2) accessory structures on a lot. These restrictions do not apply to agricultural uses or structures within a special zoning district.

§312 Special Zoning Districts Lot and Yard Requirements

A. Site development shall meet the Minimum Lot Area, Minimum Lot Frontage, Minimum Lot Width, Minimum Front Yard, Minimum Side Yard, Minimum Rear Yard and Building setback that are established in Table 306;

DRAFT

B. No structure shall exceed the maximum height above grade as provided in Table 306, except as provided in §316.

Table 306. Lot and Dimensional Requirements, Special Zoning Districts.

	S	LF	BLVD RESIDENTIAL	BLVD / NON-RESIDENTIAL
Minimum Lot Area	20,000 ft^2	20,000 ft^2	7,500 ft^2	SEE ARTICLE V (Conditional Use)
Minimum Lot Width	100 feet	100 feet	60 feet	
Minimum Lot Frontage	60 feet	60 feet	40 feet	
Minimum Front Yard	30 feet	30 feet	30 feet	
Minimum Side Yard	15 feet	15 feet	10 feet	
Minimum Rear Yard	40 feet	40 feet	40 feet	
Maximum Height	35 feet	35 feet	35 feet	

§313 Special Zoning Districts Rear and Side Yard Separation Standards

A. The separation between similar and dissimilar land uses shall be proportionally related to the degree of incompatibility or difference in use of the adjacent land uses, as defined below:

1) Minor side and rear yard separation of fifteen (15) feet shall be required between single-family residential uses for all off street parking spaces and access drives for all non-residential land uses.

2) Moderate side and rear yard separation of twenty (20) feet shall be required between single-family residential uses that are adjacent to multi-family residential uses.

3) Substantial side and rear yard separation of forty (40) feet shall be required between single-family residential or multi-family residential uses that are adjacent to places of worship and schools.

4) Major side and rear yard separation of fifty (50) feet shall be required between single-family residential or multi-family residential uses that are adjacent to planned residential developments, planned non-residential developments, recreational areas, vocational schools, entertainment facilities, motels, all business uses, all commercial uses, all industrial uses, and waste collection areas.

Table 307. Rear and Side Yard Separation Standards for Special Zoning Districts

Rear and Side Yard	Separation
Minor	15 Ft
Moderate	20 Ft
Substantial	40 Ft
Major	50 Ft

DRAFT

B. When the side and rear yard separation areas conflict with the minimum yard requirement or §313 of this Ordinance, the greater distance shall apply.

C. All side and rear yard separation areas shall be landscaped and buffered in accordance with §806.

§314 Lots Abutting More Than One Street

Lots that abut on more than one (1) street shall provide the required front yard along every public or private street. The remaining yards shall be considered side yards.

§315 Supplemental Lot and Yard Requirements

A. Only one (1) principal structure, along with permitted accessory structures, shall be located on any lot, except for planned residential development and planned nonresidential development;

B. No structure shall project into any minimum front, side or rear yard, except for the following:

1) Accessory structures to single-family homes may extend into required rear and side yards, but not closer than ten (10) feet to the property line;

2) Unenclosed patios and articles of decoration around a principal structure may be located in any required yard;

3) Buttress, chimney, cornice, pier or pilaster extending no more than twenty-four (24) inches from the wall of a principal structure may be located in any required yard;

4) An unenclosed porch no more than fifteen (15) feet in height and twelve (12) feet in depth may be erected in the front or rear yard of any residential structure, but may not extend into a required side yard; or

5) In all residential zoning districts, an unenclosed porch or stoop no more than fifteen (15) feet in height and four (4) feet in depth may extend into a required side yard.

C. Commercial vehicles, utility trailers, commercial trailers, living trailers, mobile homes and recreational vehicles shall not be stored in any front yard or side yard; **BOATS**—SEE PERFORMANCE STANDARDS SECTION: **§820 Recreational Vehicles and Motorized Recreational Equipment**

D. No required yard in any district shall be used for parking except a driveway for residential uses. In the R-1 zoning district, no more than twenty-five percent (25%) of the front yard shall be devoted to driveway access. In the R-2 and R-3 zoning districts, no more than fifty percent (50%) of the front yard may be devoted to driveway access. Driveway access shall be permitted in non-residential zoning districts by land development approval pursuant to the Subdivision and Land Development Ordinance.

§316 Supplemental Height Regulations

A. No structure shall exceed the maximum height above grade except for the following:

DRAFT

1) No accessory structure shall exceed a mean height of fifteen (15) feet. These restrictions do not apply to agricultural uses or structures.

2) No residential structure except an apartment may exceed thirty-five (35) feet; or

3) A structure for any permitted or conditional use in any Zoning District may exceed the maximum permitted height provided that:

    a) Every required yard setback is increased by one (1) foot for each additional foot of height.

    b) Such request shall be permitted as a special exception and subject to the requirements in Article XII, Zoning Hearing Board.

B. The height requirements in any zoning district shall not apply to church spires, belfries, monuments, water or fire towers, ornamental towers, spires, chimneys, elevator bulkheads and smokestacks, provided that every required yard is increased by one (1) foot for each additional foot of height above the maximum height.

§317 All Other Uses

Where a use is not listed as a permitted, conditional or special exception use, a landowner and/or developer may request approval for a use variance, in which case the Zoning Hearing Board shall determine if the characteristics of the proposed use are similar in nature to any use listed in this Article. In order to receive approval, the Zoning Hearing Board shall determine that the impact of the proposed use on the environment and adjacent streets and properties is equal to or less than any use specifically listed in the applicable zoning district. In making such determination, the Zoning Hearing Board shall consider at least the following characteristics of the proposed use:

A. The proposed use must be fully consistent and in harmony with the purpose of the district in which it will be located;

B. The proposed use shall comply with all applicable area and bulk regulations of the zoning district in which it is located;

C. The proposed use shall comply with the expressed standards and criteria of the zoning district in which the use is to be located and all other requirements of this Ordinance and the Subdivision and Land Development Ordinance;

D. The proposed use shall comply with the criteria set forth within the Municipal Code regarding traffic and environmental impacts;

E. The proposed use shall be in accordance with the Community Development objectives of this Ordinance and the Comprehensive Plan, Joint Comprehensive Plan, and Active Transportation Plan;

F. In making such determination, the Zoning Hearing Board shall evaluate the following characteristics of the proposed use:

    1) The floor area of the building or gross area of the lot devoted to the proposed use;

DRAFT

2) The number of employees, visitors and customers resulting from the proposed use;

3) The type of products, materials and equipment and/or processes involved in the proposed use; and

4) Parking availability.

G. An application for approval as such a use shall be accompanied by a land development plan in accordance with the Subdivision and Land Development Ordinance and/or this Ordinance as may be applicable.

§318 Site Plan Review Checklist

(Applicants should also Reference: SALDO Ord. 2525, Land Disturbance Ord. 2651, Road Standards Ord. 2527, Construction Standards Ord. 2530, Stormwater Ord. 2700, Comprehensive Plan, Joint Comprehensive Plan, Active Transportation Plan, Streetscape Plan)

SITE PLAN REVIEW: No Zoning Permit or Zoning Occupancy Permit shall be issued for any use upon any lot except a one-family home until a Site Development Plan has been submitted, reviewed and approved in accordance with the following provisions, provided however that existing structures where the occupancy is being changed without any change in use category or new construction or addition to structures and without change in the site are exempt from this requirement.

A. The application for approval of a proposed Site Development Plan shall be submitted in the office of the Zoning Officer and shall be accompanied by a fee established by resolution of Council to cover the cost of review. The Zoning Officer shall set a reasonable time schedule to be followed prior to the presentation of the application to Council.

B. The application shall consist of not less than **fifteen(15)** copies of the letter of application together with not less than **fifteen (15)** prints **(folded)** of each drawing submitted as part of the proposed Site Development Plan. The Proposed Site Development Plan shall be drawn by a licensed architect, engineer, planner, surveyor or landscape architect in accordance with standard architectural and engineering practices to clearly indicate the following:

1) Property lines and total acreage of parcel proposed for development;

2) All existing streets, rights-of-way, and easements related to the development;

3) The location of existing driveways on adjacent properties;

4) The location of relevant natural features, including, but not limited to, streams or other natural water courses and adjacent lands which are subject to flooding, and significant stands of existing trees;

5) The location of existing structures, including structures located on abutting property if within fifty feet of the common property line;

6) Required front, side and rear yard lines, and any required building line;

7) Fuel Tank / Hazardous Material setback line as required by the governing agency for the substance to be stored;

DRAFT

8) Contour lines at two-foot intervals where average slope is ten percent or less, and five-foot intervals where average slope exceeds ten percent, and twenty (20) foot intervals were average slope exceeds twenty-five (25%) percent;

9) Location, dimensions, total square footage and ground floor elevations of proposed structures, walkways, driveways, entrances, parking facilities, loading spaces, landscaping, signs, lighting facilities, fences or walls, fire hydrants and fire lanes and other site improvements or amenities;

10) Contours and sufficient elevations to show proposed gradings and data to show gradient of access drives, parking facilities and surface water run-off.

11) Location and approximate size of utilities to serve the development;

12) Schematic elevations at an appropriate architectural scale;

13) Surface water runoff controls;

14) Title block giving name of development, property owner, developer, north point, date and scale (minimum, 1"=50' written and graphic) on a standard ***sheet size of 24"H x 36"W***; and

15) Such other information as may be required by the Zoning Officer.

16) Table listing Zoning requirements including bulk dimensional and parking (required and provided).

C. For proposals in floodplains, the application shall additionally include:

1) Topographic contour lines at an interval of two feet;

2) The location of any existing bodies of water or watercourses, identified flood plains, information pertaining to the floodway, and the flow of water including direction and velocities;

3) The proposed lowest floor elevation of any proposed building based upon National Geodetic Vertical Datum of 1929;

4) The elevation of the one-hundred (100) year flood; and information concerning flood depths, pressures, impact and uplift forces and other factors associated with a one-hundred year flood;

5) Detailed information concerning any proposed flood-proofing measures;

6) A document, certified by a registered professional surveyor, engineer or architect, which states that the proposed construction of development has been adequately designed to withstand the one-hundred (100) year flood elevations, pressures, velocities, impact and uplift forces associated with the one-hundred (100) year flood. Such statement shall include a description of the type and extent of floodproofing measures which have been incorporated into the design of the structure or development; and

DRAFT

7) Where any excavation or grading is proposed, a plan meeting the requirements of the Pennsylvania Department of Environmental Resources, to implement and maintain erosion and sedimentation control.

D. Action shall be taken by the Council, either approving or disapproving, within ninety (90) days from the date of the regular Planning Commission meeting at which the site plan first appears as an agenda item. Failure of the Council to so act shall be considered approval of the plan as submitted. Council may attach such conditions as they deem appropriate to approval. Approval may be conditioned upon the grant of a variance or of a special exception by the Zoning Hearing Board where such variance or special exception is required, but such conditional approval by Council shall not be binding on the Zoning Hearing Board, and the conditional approval shall be canceled if the requested variance or special exception is denied by the Board.

1) Site plan approval shall not be official until and unless the site plan as approved by Council and including all conditions of approval by Council is filed with the Zoning Officer within ninety (90) days of action by Council.

2) Site plan approval shall be valid for a period of one year following Council action. If the proposed improvements are not under construction within one year or completed within two years, Council approval shall be void.

E. Council shall not approve a Site Development Plan unless the following standards are met:

1) Screening: (Reference Section 808 for specific requirements) A planted visual barrier, or landscape screen shall be provided and maintained on any property in a commercial or industrial district which is contiguous to any residential district, except where natural or physical barriers exist which are deemed to provide an adequate buffer by the Planning Agency. This screen shall be composed of plants and trees arranged to form both a low level and a high-level screen. The high-level screen shall consist of trees planted with specimens not less ten (10) feet in height, and planted at intervals of not more than ten feet of separation. The low-level screen shall consist of shrubs or hedges planted at an initial height of not less than two feet, placed in alternating rows to produce a dense visual barrier. Any plant not surviving three years after planting, shall be replaced.

2) Storage: (Reference Section 810 for specific requirements) Any article or material stored temporarily outside an enclosed building as an incidental part of the primary commercial or industrial operation, shall be so screened by opaque ornamental fencing, walls or evergreen planting, that it cannot be seen from adjoining public streets or adjacent lots, when viewed by a person standing on ground level.

3) Landscaping: (Reference Section 806 for specific requirements) Any part or portion of the site which is not used for buildings, other structures, loading or parking spaces and aisles, sidewalks and designated storage areas, shall be planted with an all-season ground cover and shall be landscaped with trees and shrubs in accordance with an overall landscape plan and shall be in keeping with natural surroundings. Any off-street parking area with five or more spaces, shall provide a landscaped perimeter for the parking area of not less than five percent of the parking area which shall be in addition to open area requirements

DRAFT

or the district. At least one tree per five parking spaces, or portion thereof, shall be provided.

4) Lighting: All parking areas, driveways and loading areas, entry ways, and pedestrian paths shall be provided with a lighting system which shall furnish an average minimum of 0.5 foot candles within such areas during hours of operation. All lighting shall be completely shielded from traffic on any public right of way and from any residential district.

5) Interior Circulation: The interior circulation of traffic in commercial areas shall be designated so that no driveway or access lane providing parking spaces, shall be used as a through-street. If parking spaces are indicated by lines with angles other than 90 degrees, then traffic lanes shall be restricted to one-way permitting head-in parking. No driveway or street used for interior circulation shall have traffic lanes less than ten feet in width.

6) Access: Areas provided for loading and unloading of delivery trucks and other vehicles, and for the servicing of shops by refuse collection, fuel and other service vehicles, shall be adequate in size and shall be so arranged that they may be used without blockage, or interference with the use of public streets or sidewalks, other accessways or automobile parking facilities.

7) Traffic Control: No design shall be approved which is likely to create substantial pedestrian or vehicular traffic hazards endangering the public safety. Safety requirements which may be imposed in such a review shall include traffic control devices, acceleration or deceleration lanes, turning lanes, traffic and lane markings, walkways, and signs. The developer shall be responsible for the construction of any such traffic control devices.

8) Stormwater Management: Adequate stormwater retention facilities shall be provided as outlined in: *Ordinance 2700, as adopted April 9, 2019.*

9) Signs: Every existing nonconforming sign shall be removed.

10) Waste Handling: All rubbish shall be stored in air-tight, vermin-proof, easily cleanable, damage resistant containers on the same lot as the principal use with sufficient capacity for storing the maximum volume of garbage, rubbish, and other waste material which may be generated on the site. For one-family attached or detached homes such containers shall be on the same lot as the principal structure. For all other uses such containers shall be stored on the same lot as the principal structure in a suitable buffered and landscaped area with concrete pads constructed with aprons below the frost line for vector control and having ready access for refuse trucks. Bulk refuse containers for food facilities shall be placed on concrete pads equipped with drains that permit frequent cleaning and disposal of wastewater to a sanitary sewer. Storage may also be in a separate room within the principal structure, sprinklered and having a concrete floor designed for and capable of storing the maximum volume of garbage, rubbish, and other waste material which may be generated on the site.

    a) Also refer to the 2015 International Property Maintenance Code (IPMC) for additional property maintenance requirements. The 2015 IPMC was adopted by ordinance 2685 June 12, 2018.

DRAFT

11) Street Traffic Control Devices: All street name signs, traffic control signs and other traffic control devices shall be provided as follows:

a) All street name signs, traffic control signs and other traffic control devices as deemed necessary by the Municipality shall be provided and erected by the applicant.

b) All street name signs shall conform to and be erected as per the Municipality of Monroeville's specifications for street name signs.

c) All traffic control signs shall be Pennsylvania Department of Transportation approved, conformed to applicable regulations and be placed using heavy duty breakaway channel posts (or equal as approved by the Municipality).

d) All other traffic control devices shall be Municipal approved and conform to Pennsylvania Department of Transportation as well as all other applicable regulations, including any federal or county regulations promulgated for specific projects.

e) All traffic signals shall have pre-emptive equipment provided and erected by the applicant.

§319 Inspection of Site Development Work

A. Inspections

1) The Municipality shall make the inspections hereinafter required and shall either approve that portion of the work which has been completed or notify the Owner wherein the same fails to comply with the provisions of this Chapter;

2) Site Plans, approved by the Municipality, shall be maintained at the site during the progress of the site developments until the work has been approved;

3) Owner shall notify the Municipality in order to obtain inspections in accordance with the following schedule and such notification shall be made by the Owner at least twenty-four (24) hours before the inspection is to be made:

a) Initial Inspection: when work is about to be commenced;

b) Rough Grading: when all rough grading has been completed;

c) Drainage Facilities: when drainage facilities are being installed and before such facilities are backfilled;

d) Sanitary Facilities: when sanitary facilities are being installed and before such facilities are backfilled;

e) Special Structures: when excavations are completed for retaining and crib walls and when reinforcing steel is in place and before concrete is poured;

f) Roadways: when roadways and Parking Areas are rough graded and before final paving;

DRAFT

g) Additional Inspection: when in the opinion of the Municipality other inspections are necessary;

h) Final Inspection: when all work, including the installation of all drainage, landscaping and other Structures has been completed.

DRAFT

§320 Zoning Use Chart:

Municipality of Monroeville Use Chart													
	Residential				Commercial				Industrial		Special		
Uses	**R-1**	**R-2**	**R-3**	**R-4**	**C-1**	**C-2**	**C-3**	**L**	**M-1**	**M-2**	**S**	**LF**	**BLVD**
Accessory Structure	R	R	R	R	R	R	R	R	R	R	R	R	R
Agriculture/ Agricultural Farm	CU	CU	CU	CU	N	N	N	N	N	N	CU	CU	N
Airport	N	N	N	N	N	N	N	N	N	N	N	N	N
Alcohol Treatment Facility	N	N	N	N	N	CU	CU	CU	CU	CU	N	N	CU
Amusement Use	N	N	N	N	N	CU	CU	CU	CU	CU	N	N	CU
Apartment	N	N	R	R	N	N	CU	N	N	N	N	N	CU
Apiary	SE	SE	SE	SE	SE	SE	SE	SE	SE	SE	SE	SE	SE
Assisted Living Facility	N	N	CU	CU	N	CU	CU	CU	N	N	N	N	CU
Athletic Facility	N	N	CU	CU	CU	R	CU	CU	N	N	CU	N	R
Bank- See: financial Institution													
Banquet Hall	N	N	CU	CU	CU	R	CU	CU	N	N	N	N	CU
Bar	N	N	N	N	R	R	R	N	N	N	N	N	R
Bed and Breakfast	N	N	SE	SE	N	N	SE	N	N	N	N	N	SE
Billboard/ Outdoor advertising sign	N	N	N	N	N	CU	CU	N	N	N	N	N	CU
Brewery (Micro-Brewery)	N	N	N	N	CU	R	CU	CU	CU	CU	N	N	CU
Business Service	N	N	N	N	R	R	R	R	N	N	N	N	R
Carport	SE	SE	SE	SE	N	N	SE	N	N	N	SE	N	SE
Car Rental- See: *"Vehicle Leasing"*													
Car Wash- See: *"Vehicle Wash"*													
Casino	N	N	N	N	N	CU	CU	CU	N	N	N	N	CU
Cemetery	N	N	N	N	N	N	N	N	N	N	CU	N	N
Chickens / Fowl	SE	SE	N	N	N	N	N	N	N	N	SE	N	N
Child Care Center	N	N	N	N	CU	CU	CU	N	N	N	N	N	CU
Church-See: *"Place of Worship"*													
Cigar Bar/Lounge	N	N	N	N	CU	R	R	CU	R	R	N	N	R
Commercial Communication antenna	N	N	N	N	N	R	R	R	R	R	N	N	R

DRAFT

	Residential				Commercial				Industrial		Special		
Uses	**R-1**	**R-2**	**R-3**	**R-4**	**C-1**	**C-2**	**C-3**	**L**	**M-1**	**M-2**	**S**	**LF**	**BLVD**
Commercial Communication Tower	N	N	N	N	N	CU	CU	CU	CU	CU	CU	CU	CU
Commercial Commuter Lot	N	N	N	N	N	CU	CU	CU	CU	CU	N	N	CU
Community Center(Public)	CU	CU	CU	CU	R	R	R	R	N	N	CU	N	CU
Condominium	N	N	R	R	N	N	R	N	N	N	N	N	R
Continuing Care Facility	N	N	CU	CU	N	CU	CU	CU	N	N	N	N	CU
Contractors Yard	N	N	N	N	N	N	N	N	CU	CU	N	N	N
Convenience Store	N	N	N	N	CU	R	CU	CU	CU	CU	N	N	CU
Convention Center	N	N	N	N	N	CU	CU	N	N	N	N	N	CU
Correctional Institution	N	N	N	N	N	N	N	N	N	CU	N	N	N
Crematorium	N	N	N	N	N	N	N	N	R	R	N	N	N
Data Center	N	N	N	N	N	CU	CU	R	R	R	N	N	CU
Day Care- See: *"Child Care"*													
Day Spa	N	N	N	N	CU	R	CU	CU	N	N	CU	N	CU
Dependent Dwelling	SE	CU	CU	CU	CU	N	SE	N	N	N	SE	N	SE
Distribution Center	N	N	N	N	N	N	N	CU	R	R	N	N	N
Drive-In Restaurant	N	N	N	N	N	R	R	N	N	N	N	N	R
Drive-In Theater						CU	CU	CU	CU	CU			CU
Drive-Thru Establishment	N	N	N	N	R	R	R	N	N	N	N	N	R
Drive-Thru Restaurant	N	N	N	N	N	R	R	N	N	N	N	N	R
Driving Range	N	N	N	N	N	N	N	N	CU	CU	CU	CU	N
Dry Cleaning	N	N	N	N	R	R	R	R	R	N	N	N	R
Duplex See: *"Two-Family House"*													
Educational Institution	N	N	N	N	N	CU	CU	CU	N	N	N	N	CU
Financial Institution, Insurance, and Real Estate Office	N	N	N	N	R	R	R	R	N	N	N	N	R
Fitness Center	N	N	N	N	CU	R	R	CU	N	N	CU	N	R
Food and Processing Establishment	N	N	N	N	N	CU	CU	CU	R	R	N	N	CU
Food Truck	R	R	R	R	R	R	R	R	R	R	R	R	R

DRAFT

	Residential				Commercial				Industrial		Special		
Uses	**R-1**	**R-2**	**R-3**	**R-4**	**C-1**	**C-2**	**C-3**	**L**	**M-1**	**M-2**	**S**	**LF**	**BLVD**
Forestry	R	R	R	R	R	R	R	R	R	R	R	R	R
Freight Terminal	N	N	N	N	N	N	N	N	R	R	N	N	N
Fuel Service (Gas/Charging Station)	N	N	N	N	CU	CU	CU	N	CU	CU	N	N	CU
Funeral Home	N	N	N	N	N	R	R	N	N	N	N	N	R
Garden Apartment	N	N	R	R	N	N	CU	N	N	N	N	N	CU
Gas Station—See *"Fuel Service"*													
Golf Course	CU	CU	N	N	N	N	N	N	N	N	CU	CU	N
Greenhouse	N	N	N	N	N	R	CU	N	R	R	N	N	CU
Group Home	R	R	R	R	N	N	N	N	N	N	N	N	N
Gun Range, Indoor	N	N	N	N	N	R	CU	R	R	R	N	N	CU
Gun Range, Outdoor	N	N	N	N	N	N	N	CU	CU	CU	CU	CU	N
Gymnasium	N	N	CU	CU	CU	R	CU	N	CU	CU	N	N	CU
Ham Radio	SE	SE	N	N	N	N	N	SE	SE	N	SE	SE	N
Helipad	N	N	N	N	N	CU	CU	CU	CU	CU	N	N	CU
Heliport	N	N	N	N	N	CU	CU	CU	CU	CU	N	N	CU
Helistop	N	N	N	N	N	CU	CU	CU	CU	CU	N	N	CU
Hobby Farm	CU	CU	N	N	N	N	N	N	N	N	N	N	N
Home-Based Business (No Impact)	R	R	R	R	N	N	N	N	N	N	SE	N	SE
Home Occupation (No Impact)	SE	SE	SE	SE	N	N	N	N	N	N	SE	N	SE
Hookah Lounge—See Cigar Bar													
Hospice	N	N	CU	CU	N	CU	CU	CU	N	N	CU	N	CU
Hospital	N	N	N	N	N	N	N	CU	N	N	N	N	N
Hotel/Motel	N	N	N	N	N	CU	CU	N	N	N	N	N	CU
Hydronic Heater	R	CU	N	N	N	N	N	CU	CU	CU	CU	CU	N
Impoundment (Oil and Gas)	N	N	N	N	N	N	N	N	N	CU	N	N	N
Industrialized Home See: *"Single-family residential"*													
Injection Well	N	N	N	N	N	N	N	N	N	CU	~~CU~~	~~CU~~	N
Kennel	N	N	N	N	N	SE	N	N	SE	SE	SE	SE	N

DRAFT

	Residential				Commercial				Industrial		Special		
Uses	**R-1**	**R-2**	**R-3**	**R-4**	**C-1**	**C-2**	**C-3**	**L**	**M-1**	**M-2**	**S**	**LF**	**BLVD**
Laundromat	N	N	N	N	R	R	R	N	N	N	N	N	R
Library See: *"Public Use"*													
Light Manufacturing	N	N	N	N	N	N	N	N	R	R	N	N	N
Limited Office	N	N	N	N	R	R	R	R	R	R	N	R	R
Local Restaurant	N	N	N	N	R	R	R	N	N	N	N	N	R
Local Retail Shop	N	N	N	N	R	R	R	N	N	N	N	N	R
Major Excavation	CU	CU	CU	CU	CU	CU	CU	CU	CU	CU	CU	CU	CU
Manufactured Home See: *"Single-Family Residential"*													
Manufacturing	N	N	N	N	N	N	N	N	CU	CU	N	N	N
Marijuana Dispensary See: *"Medical Marijuana Dispensary"*													
Message Parlor See: *"Therapeutic Massage Facility"*													
Medical Clinic	N	N	N	N	N	R	R	N	N	N	N	N	R
Medical Marijuana Dispensary	N	N	N	N	CU	CU	CU	N	N	N	N	N	CU
Medical Marijuana Grow Facility	N	N	N	N	N	N	N	CU	CU	CU	N	CU	N
Medical Office See: *"Office"*													
Membership Club	N	N	CU	CU	CU	P	CU	CU	N	N	CU	N	R
Methadone Treatment Facility	N	N	N	N	N	CU	CU	CU	CU	CU	CU	N	CU
Mini Warehouse See: *"Self Storage"*													
Mobile Home Park	N	N	CU	N	N	N	N	N	CU	N	N	N	N
Modular Home See: *"Single-Family Residential"*													
Motel See: *"Hotel"*													

DRAFT

	Residential				Commercial				Industrial		Special		
Uses	**R-1**	**R-2**	**R-3**	**R-4**	**C-1**	**C-2**	**C-3**	**L**	**M-1**	**M-2**	**S**	**LF**	**BLVD**
Multi-Family See: *"Apartment, Two-Family Home, Quadraplex"*													
Municipal Waste Landfill	N	N	N	N	N	N	N	N	N	N	N	R	N
Natural Gas Compressor Station	N	N	N	N	N	N	N	N	N	CU	N	N	N
Natural Gas Processing Plant	N	N	N	N	N	N	N	N	N	CU	N	N	N
Nature Preserve	R	R	R	R	R	R	R	R	R	R	R	R	R
Night Club	N	N	N	N	N	CU	CU	N	N	N	N	N	CU
Nursery	N	N	N	N	N	N	N	N	R	R	N	N	N
Nursing Home Facility	N	N	CU	CU	N	CU	CU	CU	N	N	N	N	CU
Office	N	N	N	N	N	R	R	R	R	R	N	R	R
Oil and Gas Development	N	N	N	N	N	N	N	N	N	CU	~~CU~~	~~CU~~	N
One-Family Residential See Single: *"Family Residential"*													
Outdoor Dinning	N	N	N	N	R	R	R	R	N	N	N	N	R
Park	R	R	R	R	R	R	R	R	R	R	R	R	R
Parking garage	N	N	N	N	N	CU	CU	CU	CU	CU	N	N	CU
Personal Care Home Facility	N	N	N	N	N	CU	CU	CU	N	N	N	N	CU
Personal Services	N	N	N	N	R	R	R	R	R	R	N	N	R
Place of Worship	CU	CU	CU	CU	CU	CU	CU	CU	N	N	CU	N	CU
Planned Non-Residential Development	N	N	N	N	CU	CU	CU	CU	CU	CU	N	N	CU
Planned Residential Development	CU	CU	CU	CU	N	N	N	N	N	N	N	N	N
Public Use	CU	CU	CU	CU	CU	CU	CU	CU	CU	CU	CU	CU	CU
Public Utility Facility	CU	CU	CU	CU	CU	CU	CU	CU	CU	CU	CU	CU	CU
Quadplex	N	N	R	R	N	N	N	N	N	N	N	N	N
Quarry	N	N	N	N	N	N	N	N	N	CU	N	N	N
Recreational Facility/Club	N	N	N	N	CU	R	CU	CU	R	R	CU	N	CU
Rental Hall See: *"Banquet Hall"*													

DRAFT

	Residential				Commercial				Industrial		Special		
Uses	**R-1**	**R-2**	**R-3**	**R-4**	**C-1**	**C-2**	**C-3**	**L**	**M-1**	**M-2**	**S**	**LF**	**BLVD**
Rehabilitation Clinic (Alcohol/Drug) See: *"Substance Abuse Facility"*													
Religious Establishment See: *"Place of Worship"*													
Research Development Facility	N	N	N	N	N	N	N	R	R	R	N	N	N
Restaurant	N	N	N	N	SE	R	R	R	N	N	N	N	R
Retail Sales	N	N	N	N	SE	R	R	N	N	N	N	N	R
Retail Sales, Outdoor	N	N	N	N	CU	CU	CU	N	N	N	N	N	CU
Salvage Yard	N	N	N	N	N	N	N	N	N	CU	N	N	N
School	R	R	R	R	R	R	R	R	R	R	R	R	R
Self Service Laundry See: *"Laundromat"*													
Self Storage	N	N	N	N	N	CU	CU	CU	R	R	N	N	CU
Senior Housing See: *"Apartment"*													
Sexually Oriented Business	N	N	N	N	N	N	N	N	N	CU	N	N	N
Shopping Center	N	N	N	N	N	R	CU	N	N	N	N	N	CU
Short-Term Rental	N	N	SE	SE	N	N	SE	N	N	N	N	N	SE
Sign, Directional (Off Premises)	SE	SE	SE	SE	SE	SE	SE	SE	SE	SE	SE	SE	SE
Single-Family Residential	R	R	R	R	N	N	CU	N	N	N	R	N	CU
Skilled Nursing Facility	N	N	N	N	N	CU	CU	CU	N	N	N	N	CU
Solar Energy Facility (Principal Use)	N	N	N	N	N	N	N	CU	CU	CU	CU	CU	N
Sports Facility	N	N	N	N	N	R	CU	CU	R	R	N	N	CU
Stable See: *"Agriculture"*													
Studio	N	N	N	N	SE	R	R	N	N	N	N	N	R
Swimming Pool (Public)	CU	CU	CU	CU	CU	CU	CU	CU	N	N	CU	N	CU
Tattoo Parlor/Body Piercing Studio	N	N	N	N	N	CU	CU	N	CU	N	N	N	CU
Temporary Structure	SE	SE	SE	SE	SE	SE	SE	SE	SE	SE	SE	SE	SE

DRAFT

	Residential				Commercial				Industrial		Special		
Uses	**R-1**	**R-2**	**R-3**	**R-4**	**C-1**	**C-2**	**C-3**	**L**	**M-1**	**M-2**	**S**	**LF**	**BLVD**
Theater See: *"Amusement use"*													
Therapeutic Massage Facility	N	N	N	N	CU	CU	CU	N	N	N	N	N	CU
Timbering See: *"Forestry"*													
Tiny Home	N	N	CU	N	N	N	N	N	CU	N	N	N	N
Townhouse	N	N	R	R	N	N	CU	N	N	N	N	N	CU
Two-Family Home	N	P	R	R	N	N	CU	N	N	N	N	N	CU
Utility Substation See Public Utility Facility													
Vehicle, Leasing/Rental or Sales	N	N	N	N	N	R	CU	N	R	R	N	N	CU
Vehicle Repair Service Garage	N	N	N	N	N	CU	CU	N	CU	CU	N	N	CU
Vehicle Sales Area	N	N	N	N	CU	R	CU	N	R	R	N	N	CU
Vehicle Sales Room	N	N	N	N	CU	R	P	N	R	R	N	N	R
Vehicle wash, Automatic	N	N	N	N	CU	R	CU	N	R	N	N	N	CU
Vehicle Wash, Self-Serve	N	N	N	N	CU	R	CU	N	R	N	N	N	CU
Veterinary Hospital	N	N	N	N	CU	R	CU	N	CU	CU	N	N	CU
Vocational School	N	N	N	N	N	CU	CU	CU	R	R	N	N	CU
Warehousing, Private	N	N	N	N	N	CU	CU	R	R	R	N	N	CU
Wind Energy Facility (Windmill) As a Primary Use	N	N	N	N	N	N	N	CU	CU	CU	CU	CU	N
Wind Energy Facility (Windmill)- As an Accessory Use	SE	SE	SE	SE	SE	SE	SE	SE	SE	SE	SE	SE	SE

~ END OF SECTION ~

DRAFT

ARTICLE IV – OVERLAY DISTRICTS

§401 Purpose of Floodplain Overlay (FPO) District
§402 Floodplain Overlay (FPO) District General Provisions
§403 Alteration or Relocation of Watercourse
§404 Floodplain Overlay (FPO) District Administration
§405 Floodplain Overlay (FPO) District Identification of Floodplain Areas
§406 Floodplain Overlay District Uses and Provisions
§407 Floodplain Overlay (FPO) District Technical Provisions
§408 Floodplain Overlay (FPO) District Existing Lots or Parcels of Record and Newly Created Lots or Parcels
~~§407 Floodplain Overlay (FPO) District Prohibited Development~~
§409 Floodplain Overlay (FPO) District Existing Structures in Identified Floodplain Areas
§410 Floodplain Overlay (FPO) District Variances
§411 Purpose of Landslide Prone Overlay (LSO) District
§412 Effect of Landslide Prone Overlay (LSO) District Regulations
§413 Purpose of Steep Slope Overlay (SSO) District
§414 Development on Slopes in the Steep Slope Overlay (SSO) District
§415 Purpose of Medical Overlay (MO) District
§416 Medical Overlay (MO) District Development Regulations

REPLACED ENTIRE FLOODPLAIN SECTION WITH SECTION REVIEWED BY LESLIE RHOADES DATED 1/23/23

§401 Purpose of Floodplain Overlay (FPO) District

The Legislature of the Commonwealth of Pennsylvania has, by the passage of the Pennsylvania Floodplain Management Act of 1978, delegated the responsibility to local governmental units to adopt floodplain management regulations to promote public health, safety, and the general welfare of its citizenry. Therefore, the Council of the Municipality of Monroeville does hereby order as follows:

§402 Floodplain Overlay (FPO) District General Provisions

A. Intent - The intent of the Floodplain Overlay District is to meet the requirements of the National Flood Insurance Program Section 60.3)d), the Pennsylvania Floodplain Management Act (Act 166-1978) and the associated regulations adopted by the Pennsylvania Department of Community and Economic Development pursuant to that Act. The Floodplain Overlay District is also intended to:

1) Promote the general health, welfare, and safety of the community by minimizing the loss of life, health hazards and property damage which may be caused by floods;

2) Encourage the utilization of appropriate construction practices in order to prevent or minimize flood damage in the future;

3) Minimize danger to public health by protecting water supply and natural drainage;

DRAFT

4) Reduce financial burdens imposed on the community, its governmental units, and its residents by preventing excessive development in areas subject to flooding;

5) Comply with federal and state floodplain management requirements; and

6) Maintain the existing hydrologic regime through the sound management of floodplains for their capacity to convey, transport, store and dissipate flood flow volumes and velocities, to protect water quality and to maintain stream channel stability.

B. Applicability

1) It shall be unlawful for any person, partnership, business or corporation to undertake, or cause to be undertaken, any construction or development anywhere within a floodplain or floodway area within the Municipality of Monroeville unless a permit has been obtained from the Floodplain Administrator;

C. Abrogation and Greater Restrictions

1) This Ordinance supersedes any other conflicting provisions which may be in effect in identified floodplain areas. However, any other ordinance provisions shall remain in full force and effect to the extent that those provisions are more restrictive. If there is any conflict between any of the provisions of this Ordinance, the more restrictive shall apply.

D. Severability

1) If any section, subsection, paragraph, sentence, clause, or phrase of this Ordinance shall be declared invalid for any reason whatsoever, such a decision shall not affect the remaining portions of the Ordinance, which shall remain in full force and effect, and for this purpose the provisions of this Ordinance are hereby declared to be severable.

E. Warning and Disclaimer of Liability

1) The degree of flood protection sought by the provisions of this Ordinance is considered reasonable for regulatory purposes and is based on accepted engineering methods of study. Larger floods may occur or flood heights may be increased by man-made or natural causes, such as ice jams and bridge openings restricted by debris. This Ordinance does not imply that areas outside any identified floodplain areas or that land uses permitted within such areas will be free from flooding or flood damages.

2) This Ordinance shall not create liability on the part of the Municipality of Monroeville or any officer or employee thereof for any flood damages that result from reliance on this Ordinance or any administrative decision lawfully made thereunder.

§403 Floodplain Overlay (FPO) Alteration or Relocation of Watercourse

A. No encroachment, alteration, or improvement of any kind shall be made to any watercourse until all adjacent municipalities, which may be affected by such action,

DRAFT

have been notified by the municipality, and until all required permits or approvals have first been obtained from the Department of Environmental Protection Regional Office.

B. No encroachment, alteration, or improvement of any kind shall be made to any watercourse, unless it can be shown that the activity will not reduce or impede the flood carrying capacity of the watercourse in any way and the purpose of the project is for improvement floodplain restoration.

C. In addition, FEMA and the Pennsylvania Emergency Management Agency (PEMA), shall be notified prior to any alteration or relocation of any watercourse.

1) When a community proposes to permit the following encroachment:

a) any development that causes a rise in the base flood elevations within the floodway; or

b) any development occurring in Zones A1-30 and Zone AE without a designated floodway, which will cause a rise of more than one foot in the base flood elevation; or

c) alteration or relocation of a stream (including but not limited to installing culverts and bridges)

d) the Applicant shall (as per 44 CFR Part 65.12):

i. Apply to FEMA for conditional approval of such action prior to permitting the encroachments to occur.

ii. Upon receipt of the Administrator's conditional approval of map change and prior to approving the proposed encroachments, the Municipality shall provide evidence to FEMA of the adoption of floodplain management ordinances incorporating the increased base flood elevations and/or revised floodway reflecting the post-project condition.

iii. Upon completion of the proposed encroachments, the Municipality shall provide as-built certifications. FEMA will initiate a final map revision upon receipt of such certifications in accordance with 44 CFR Part 67.

§404 Floodplain Overlay (FPO) District Administration

A. Designation of the Floodplain Administrator

1) The Zoning Officer is hereby appointed to administer and enforce this Article IVand is referred to herein as the Floodplain Administrator. The Floodplain Administrator may:

a) Fulfill the duties and responsibilities set forth in these regulations,

DRAFT

b) Delegate duties and responsibilities set forth in these regulations to qualified technical personnel, plan examiners, inspectors, and other employees, or

c) Enter into a written agreement or written contract with another agency or private sector entity to administer specific provisions of these regulations. Administration of any part of these regulations by another entity shall not relieve the community of its responsibilities pursuant to the participation requirements of the National Flood Insurance Program as set forth in the Code of Federal Regulations at 44 C.F.R. Section 59.22.

2) In the absence of a designated Floodplain Administrator, the Floodplain Administrator duties are to be fulfilled by the Mayor of the Municipality of Monroeville.

B. Permits Required

1) A Permit shall be required before any construction or development is undertaken within any area of the Municipality of Monroeville.

C. Duties and Responsibilities of the Floodplain Administrator

1) The Floodplain Administrator shall issue a Permit only after it has been determined that the proposed work to be undertaken will be in conformance with the requirements of this and all other applicable codes and ordinances.

2) Prior to the issuance of any permit, the Floodplain Administrator shall review the application for the permit to determine if all other necessary government permits required by state and federal laws have been obtained, such as those required by the Pennsylvania Sewage Facilities Act (Act 1966-537, as amended); the Pennsylvania Dam Safety and Encroachments Act (Act 1978-325, as amended); the Pennsylvania Clean Streams Act (Act 1937-394, as amended); and the U.S. Clean Water Act, Section 404, 33, U.S.C. 1344. No permit shall be issued until this determination has been made.

3) In the case of existing structures, prior to the issuance of any Permit, the Floodplain Administrator shall review the history of repairs to the subject building, so that any Cumulative Substantial Damage issues can be addressed before the permit is issued.

4) During the construction period, the Floodplain Administrator or other authorized official shall inspect the premises to determine that the work is progressing in compliance with the information provided on the permit application and with all applicable municipal laws and ordinances. He/she shall make as many inspections during and upon completion of the work as are necessary.

5) In the discharge of his/her duties, the Floodplain Administrator shall have the authority to enter any building, structure, premises or development in the identified floodplain area, upon presentation of proper credentials, at any reasonable hour to enforce the provisions of this Article IV.

In the event the Floodplain Administrator discovers that the work does not comply with the permit application or any applicable laws and ordinances, or

DRAFT

that there has been a false statement or misrepresentation by any applicant, the Floodplain Administrator shall revoke the Permit and report such fact to the Municipal Council for whatever action it considers necessary.

6) The Floodplain Administrator shall maintain in perpetuity, or for the lifetime of the structure, all records associated with the requirements of this Article IVincluding, but not limited to, finished construction elevation data, permitting, inspection and enforcement.

7) The Floodplain Administrator is the official responsible for submitting a biennial report to FEMA concerning community participation in the National Flood Insurance Program.

8) The responsibility, authority and means to implement the commitments of the Floodplain Administrator can be delegated from the person identified. However, the ultimate responsibility lies with the person identified in the floodplain ordinance as the Floodplain Administrator.

9) The Floodplain Administrator shall consider the requirements of the 34 PA Code, the 2018 IBC, the 2018 IRC, or latest revisions thereof.

D. Application Procedures and Requirements

1) Application for a Permit shall be made, in writing, to the Floodplain Administrator on forms supplied by the Municipality of Monroeville. Such application shall contain the following, at a minimum:

a) Name and address of applicant.

b) Name and address of owner of land on which proposed construction is to occur.

c) Name and address of contractor.

d) Site location including address.

e) Listing of other permits required.

f) Brief description of proposed work and estimated cost, including a breakout of flood- related cost and the market value of the building before the flood damage occurred where appropriate.

g) A plan of the site showing the exact size and location of the proposed construction as well as any existing buildings or structures

2) If any proposed construction or development is located entirely or partially within any identified floodplain area, applicants for Permits shall provide all the necessary information in sufficient detail and clarity to enable the Floodplain Administrator to determine that:

a) All such proposals are consistent with the need to minimize flood damage and conform with the requirements of this and all other applicable codes and ordinances;

DRAFT

b) All utilities and facilities, such as sewer, gas, electrical and water systems are located and constructed to minimize or eliminate flood damage;

c) Adequate drainage is provided so as to reduce exposure to flood hazards;

d) Structures will be anchored to prevent floatation, collapse, or lateral movement;

e) Building materials are flood-resistant;

f) Appropriate practices that minimize flood damage have been used; and

g) Electrical, heating, ventilation, plumbing, air conditioning equipment, and other service facilities have been designed and located to prevent water entry or accumulation

3) Applicants shall file the following minimum information plus any other pertinent information as may be required by the Floodplain Administrator to make the above determination:

a) A completed Permit Application Form

b) A plan of the entire site, clearly and legibly drawn at a scale of one (1) inch being equal to fifty (50) feet or less on drawing sheets measuring 24" by 36", showing the following:

i. North arrow, scale, and date;

ii. Topographic contour lines, if available;

iii. The location of all existing and proposed buildings, structures, and other improvements, including the location of any existing or proposed subdivision and development

iv. The location of all existing streets, drives, and other access ways; and

v. The location of any existing bodies of water or watercourses, identified floodplain areas, and, if available, information pertaining to the floodway, and the flow of water including direction and velocities.

c) Plans of all proposed buildings, structures and other improvements, drawn at suitable scale showing the following:

i. The proposed lowest floor elevation of any proposed bilding based upon North American Vertical Datum of 1988;

ii. The elevation of the base flood;

iii. Supplemental information as may be necessary under 34 PA Code, the 2018 IBC or the 2018 IRC.

DRAFT

d) The following data and documentation:

i. Detailed information concerning any proposed flood proofing measures and corresponding elevations.

ii. Documentation, certified by a registered professional engineer, to show that the cumulative effect of any proposed development within any Identified Floodplain Area, Section 804, when combined with all other existing and anticipated development, will not increase the base flood elevation.

iii. A document, certified by a registered professional engineer or architect, which states that the proposed construction or development has been adequately designed to withstand the pressures, velocities, impact and uplift forces associated with the base flood. Such statement shall include a description of the type and extent of flood proofing measures which have been incorporated into the design of the structure and/or the development.

iv. Detailed information needed to determine compliance with Section 806 C (7), Storage, and Section 805 D.(2), Development Which May Endanger Human Life, including:

i) The amount, location and purpose of any materials or substances referred to in Section 806 C (7), Storage, and Section 805 D (2) which is intended to be used, produced, stored or otherwise maintained on site.

ii) A description of the safeguards incorporated into the design of the proposed structure to prevent leaks or spills of the dangerous materials or substances listed in Section 805 D (2) (c) during a base flood.

v. The appropriate component of the Department of Environmental Protection's "Planning Module for Land Development."

vi. Where any excavation or grading is proposed, a plan meeting the requirements of the Department of Environmental Protection, to implement and maintain erosion and sedimentation control.

4) Applications for Permits shall be accompanied by a fee, payable to the municipality based upon the estimated cost of the proposed construction as determined by the Floodplain Administrator.

E. Review by County Conservation District

1) A copy of all applications and plans for any proposed construction or development in any identified floodplain area to be considered for approval shall be submitted by the Floodplain Administrator to the County Conservation District for review and comment prior to the issuance of a Permit. The recommendations of the Conservation District shall be considered by the Floodplain Administrator for possible incorporation into the proposed plan.

DRAFT

F. Review of Application by Others

1) A copy of all plans and applications for any proposed construction or development in any identified floodplain area to be considered for approval may be submitted by the Floodplain Administrator to any other appropriate agencies and/or individuals (e.g. planning commission, municipal engineer, etc.) for review and comment.

G. Changes

1) After the issuance of a Permit by the Floodplain Administrator, no changes of any kind shall be made to the application, permit or any of the plans, specifications or other documents submitted with the application without the written consent or approval of the Floodplain Administrator. Requests for any such change shall be in writing and shall be submitted by the applicant to Floodplain Administrator for consideration.

H. Placards

1) In addition to the Permit, the Floodplain Administrator shall issue a placard which shall be displayed on the premises during the time construction is in progress. This placard shall show the number of the Permit, the date of its issuance, and be signed by the Floodplain Administrator

I. Start of Construction

1) Work on the proposed construction or development shall begin within 180 days after the date of issuance and shall be completed within twelve (12) months after the date of issuance of the Permit or the permit shall expire unless a time extension is granted, in writing, by the Floodplain Administrator. The issuance of the development permit does not refer to the zoning approval.

2) The actual start of construction means either the first placement of permanent construction of a structure on a site, such as the pouring of slab or footings, the installation of piles, the construction of columns, or any work beyond the stage of excavation; or the placement of a manufactured home on a foundation.

3) Permanent construction does not include land preparation, such as clearing, grading, and filling; nor does it include the installation of streets and/or walkways; nor does it include excavation for a basement, footings, piers, or foundations or the erection of temporary forms; nor does it include the installation on the property of accessory buildings, such as garages or sheds not occupied as dwelling units or not part of the main structure.

4) For a substantial improvement, the actual start of construction means the first alteration of any wall, ceiling, floor, or other structural part of a building, whether or not that alteration affects the external dimensions of the building.

5) Time extensions shall be granted only if a written request is submitted by the applicant, which sets forth sufficient and reasonable cause for the Floodplain Administrator to approve such a request and the original permit is compliant with the ordinance & FIRM/ FIS in effect at the time the extension is granted.

DRAFT

J. Enforcement

1) Notices - Whenever the Floodplain Administrator or other authorized municipal representative determines that there are reasonable grounds to believe that there has been a violation of any provisions of this Article IV, or of any regulations adopted pursuant thereto, the Floodplain Administrator shall give notice of such alleged violation as hereinafter provided. Such notice shall:

a) Be in writing;

b) Include a statement of the reasons for its issuance;

c) Allow a reasonable time not to exceed a period of thirty (30) days for the performance of any act it requires;

d) Be served upon the property owner or his agent as the case may require; provided, however, that such notice or order shall be deemed to have been properly served upon such owner or agent when a copy thereof has been served with such notice by any other method authorized or required by the laws of this State;

e) Contain an outline of remedial actions which, if taken, will effect compliance with the provisions of this Article IV.

2) Penalties

a) Any person who fails to comply with any or all of the requirements or provisions of this Article IV or who fails or refuses to comply with any notice, order or direction of the Floodplain Administrator or any other authorized employee of the Municipality shall be guilty of a summary offense and upon conviction shall pay a fine to the Municipality of Monroeville of Five Hundred Dollars ($500.00) plus costs of prosecution. Each day that a violation is continued shall constitute a separate offense.

b) In addition to the above penalties all other actions are hereby reserved including an action in equity for the proper enforcement of this Article IV.

c) The imposition of a fine or penalty for any violation of, or noncompliance with this Article IV shall not excuse the violation or noncompliance or permit it to continue.

d) All such persons shall be required to correct or remedy such violations and noncompliance within a reasonable time.

e) Any development initiated or any structure or building constructed, reconstructed, enlarged, altered, or relocated, in noncompliance with this Article IV may be declared by the Municipal Zoning Hearing Board to be a public nuisance and abatable as such.

K. Appeals

1) Any person aggrieved by any action or decision of the Floodplain Administrator concerning the administration of the provisions of this Article IV, may appeal to the Municipal Zoning Hearing Board. Such appeal must be filed, in writing,

DRAFT

within thirty (30) days after the decision, determination or action of the Floodplain Administrator.

2) Upon receipt of such appeal the Municipal Zoning Hearing Board shall consider the appeal in accordance with the Municipalities Planning Code and any other local ordinance(s).

3) Any person aggrieved by any decision of the Municipal Zoning Hearing Board may seek relief there from by appeal to court, as provided by the laws of this State including the Pennsylvania Flood Plain Management Act.

4) Granting of a Municipal appeal will not relieve a landowner or a municipality from the obligation to comply with the minimum requirements of the National Flood Insurance Program. Landowners and municipalities that fail to meet the Program's minimum requirements, notwithstanding any appellate decision to the contrary, are in violation of the National Flood Insurance Program and remain subject to the accompanying penalties.

§405 Floodplain Overlay District Identification of Floodplain Areas

A. Identification

1) The identified floodplain area shall be:

a) Any areas of the Municipality of Monroeville, classified as Special Flood Hazard Areas (SFHAs) in the Flood Insurance Study (FIS) and the accompanying Flood Insurance Rate Maps (FIRMs) dated September 26, 2014 and issued by the Federal Emergency Management Agency (FEMA) or the most recent revision thereof, including all digital data developed as part of the Flood Insurance Study and,

b) Any Community Identified Flood Hazard Areas.

2) The above referenced FIS and FIRMs, and any subsequent revisions and amendments are hereby adopted by the Municipality of Monroeville and declared to be a part of this Article IV.

B. Description of Identified Flood Hazard Areas

1) The identified floodplain area shall consist of the following specific areas:

a) The Floodway Area shall be those areas identified in the FIS and the FIRM as floodway and which represent the channel of a watercourse and the adjacent land areas that must be reserved in order to discharge the base flood without increasing the water surface elevation by more than one (1) foot at any point. This term shall also include floodway areas which have been identified in other available studies or sources of information for those Special Flood Hazard Areas where no floodway has been identified in the FIS and FIRM.

b) The AE Area/District shall be those areas identified as an AE Zone on the FIRM included in the FIS prepared by FEMA for which base flood elevations have been provided.

DRAFT

i. The AE Area adjacent to the floodway shall be those areas identified as an AE Zone on the FIRM included in the FIS prepared by FEMA for which base flood elevations have been provided and a floodway has been delineated.

ii. AE Area without floodway shall be those areas identified as an AE zone on the FIRM included in the FIS prepared by FEMA for which base flood elevations have been provided but no floodway has been determined.

c) The A Area/District shall be those areas identified as an A Zone on the FIRM included in the FIS prepared by FEMA and for which no base flood elevations have been provided. For these areas, elevation and floodway information from other Federal, State, or other acceptable sources shall be used when available. Where other acceptable information is not available, the base flood elevation shall be determined by using the elevation of a point on the boundary of the identified floodplain area which is nearest the construction site. In lieu of the above, the municipality may require the applicant to determine the elevation with hydrologic and hydraulic engineering techniques. Hydrologic and hydraulic analyses shall be undertaken only by professional engineers or others of demonstrated qualifications, who shall certify that the technical methods used correctly reflect currently accepted technical concepts. Studies, analyses, computations, etc., shall be submitted in sufficient detail to allow a thorough technical review by the municipality.

d) Community Identified Flood Hazard Areas shall be those areas where the Municipality of Monroeville has identified local flood hazard or ponding areas, as delineated and adopted on a "Local Flood Hazard Map" using best available topographic data and locally derived information such as flood of record, historic high water marks, soils or approximate study methodologies.

C. Changes in Identification of Area

1) The Identified Floodplain Area may be revised or modified by the Municipal Zoning Hearing Board where studies or information provided by a qualified agency or person documents the need for such revision. However, prior to any such change to the Special Flood Hazard Area, approval must be obtained from FEMA. Additionally, as soon as practicable, but not later than six (6) months after the date such information becomes available; a community shall notify FEMA of the changes to the Special Flood Hazard Area by submitting technical or scientific data. See Section 802 for situations where FEMA notification is required.

D. Boundary Disputes

1) Should a dispute concerning any identified floodplain boundary arise, an initial determination shall be made by the Floodplain Administrator and any party aggrieved by this decision or determination may appeal to the Municipality of Monroeville Zoning Hearing Board. The burden of proof shall be on the appellant.

DRAFT

E. Jurisdictional Boundary Changes

1) Prior to development occurring in areas where annexation or other corporate boundary changes are proposed or have occurred, the community shall review flood hazard data affecting the lands subject to boundary changes. The community shall adopt and enforce floodplain regulations in areas subject to annexation or corporate boundary changes which meet or exceed those in CFR 44 60.3.

§406 Floodplain Overlay District Uses and Provisions

A. Uses Permitted by Right.

1) The following shall be the only uses permitted in the Identified Floodplain Area, providing that they do not require fill, structures, or the storage of materials or equipment, are not prohibited by any other ordinance, and meet all requirements of this Ordinance.

a) Agricultural uses, such as general farming, pasture, orchard, forestry, and wild crop harvesting, undertaken according to recognized soil conservation practices, excluding sod farming, removal of topsoil and any structures normally associated with agricultural uses.

b) Recreation uses that do not require structures such as park, picnic grounds with anchored picnic tables, golf courses, archery, hiking and riding trails, hunting fishing areas, as well as boat launching facilities and swimming areas.

c) Wildlife sanctuary, nature preserve, fish hatchery and arboretum, excluding any structures normally associated with such uses.

d) Residential and non-residential yard areas, pervious parking areas, gardens and play areas.

e) New or replacement public or private utilities and facilities such as water, storm drainage, sewer, gas and electrical lines, provided that no acceptable alternative location exists and that such systems or improvements are designed, located and constructed so as to be floodproofed or elevated at or above the Regulatory Flood Elevation.

B. Special Exceptions

1) The following uses when authorized as a special exception and provided that such uses are compatible with those permitted in an adjacent district, and further provided that any grading or filling of the soil does not substantially alter or reduce the cross-sectional area of the stream basin at the point of the proposed use and will not result in increasing the elevation of the base flood:

a) Circuses, festivals, and similar transient amusement enterprises, provided all required permits are obtained.

DRAFT

b) Waterlines and sealed wells.

c) Railroads, roads, bridges, and utility transmission lines.

d) Storm sewer outlet and sanitary sewer treatment plant outlet, which shall take the shortest route across the flood hazard area to point of discharge, and sewage pumping stations, provided that construction is floodproofed.

e) Dams and impoundment basins where approved by appropriate public agencies.

f) Docks and piers for boating.

g) Accessory uses customarily incidental to any of the foregoing.

C. Prohibited

1) Certain Structures - All structures or development that will in any manner retard, divert or alter the natural flow of flood waters on the site except activities permitted by the Pennsylvania Department of Environmental Protection under Title 25, Chapter 105 of the Pennsylvania Code, or conveyances required by Title 25, Chapter 102, (See definition of Development.) Such structures may include but are not limited to fences, signs, walls, guide rails, etc. which may adversely affect floodwaters, may catch or collect water borne debris, or that might be carried downstream by floodwaters to damage downstream properties;

2) Within any floodway area no variance shall be granted for any new buildings or structures as defined in this Article IV as well as substantial improvements, additions, expansions, or enlargements of existing buildings.

3) Developments of Special Concern - The commencement of any of the following activities, or the construction, enlargement, or expansion of any structure used, or intended to be used, for any of the following activities shall be prohibited and no variance shall be permitted:

a) Hospitals;

b) Nursing homes;

c) Jails, prisons, or detention centers;

d) Mobile homes;

e) Mobile home parks;

f) Manufactured homes;

DRAFT

g) Manufactured home parks;

h) Campgrounds for recreational vehicles;

i) Recreational vehicles; and

j) Municipal waste landfills.

4) Development Which May Endanger Human Life

a) Within any Identified Floodplain Area, any structure of the kind described in Subsection (b)., below, shall be prohibited and no variance shall be permitted:

i. In accordance with the Pennsylvania Floodplain Management Act, and the regulations adopted by the Department of Community and Economic Development as required by the Act, any new or substantially improved structure shall be subject to the provisions of this section, in addition to all other applicable provisions:

b) Will be used for the production or storage of any of the following dangerous materials or substances; or,

i. Will be used for any activity requiring the maintenance of a supply of more than 550 gallons, or other comparable volume, of any of the following dangerous materials or substances on the premises; or,

ii. Will involve the production, storage, or use of any amount of radioactive substances;

c) The following list of materials and substances are considered dangerous to human life:

i. Acetone;

ii. Ammonia;

iii. Benzene;

iv. Calcium carbide;

v. Carbon disulfide;

vi. Celluloid;

vii. Chlorine;

viii. Hydrochloric acid;

DRAFT

ix. Hydrocyanic acid;

x. Magnesium;

xi. Nitric acid and oxides of nitrogen;

xii. Petroleum products (gasoline, fuel oil, etc.);

xiii. Phosphorus;

xiv. Potassium;

xv. Sodium;

xvi. Sulfur and sulfur products;

xvii. Pesticides (including insecticides, fungicides, and rodenticides);

xviii. Radioactive substances, insofar as such substances are not otherwise regulated; and

xix. Any other dangerous materials or substances as determined by the Municipality.

5) Prohibited except by Variance

a) Within any Identified Floodplain Area (outside a floodway) any new construction or substantial improvements shall be prohibited. If a variance is obtained for new construction or substantial improvements in the Identified Floodplain Area in accordance with the criteria in Article IV, then the following provisions apply:

b) Any new construction, development, uses or activities allowed by right, special exception or variance, and located within any identified floodplain area shall be undertaken in strict compliance with the provisions contained in this Article IV and any other applicable codes, ordinances and regulations.

c) Sewage Disposal –Community subsurface sewage disposal systems are prohibited unless a variance is obtained.

§407 Floodplain Overlay District General Technical Provisions

A. Within any identified floodplain area, a variance shall not be granted for encroachments, including fill, new construction, substantial improvements, other development, use or activity unless it has been demonstrated through hydrologic and hydraulic analysis performed in accordance with standard engineering practice that the proposed encroachment would not result in any increase in flood levels within the community during the occurrence of the base flood discharge.

B. Within any floodway area, or within 50 feet top of bank of any watercourse, variances,

DRAFT

uses by right or special exception shall not be allowed, unless the appropriate permit is obtained from the Department of Environmental Protection Regional Office.

C. Elevation and Flood Proofing Requirements

1) All structures (except accessory structures) are prohibited. If a variance is obtained for development in the Identified Floodplain Area (outside of the floodway) in accordance with the criteria in Section 809, Variances, then the following provisions apply:

a) Residential Structures

i. In AE Zones, any new construction or substantial improvement shall have the lowest floor (including basement) elevated up to, or above, the regulatory flood elevation.

ii. In A Zones, where there are no Base Flood Elevations specified on the FIRM, any new construction or substantial improvement shall have the lowest floor (including basement) elevated up to, or above, the regulatory flood elevation determined in accordance with Section 804 B (1) (c) of this Article IV.

iii. The design and construction standards and specifications contained in the 2018 International Building Code (IBC) and in the 2018 International Residential Code (IRC) or the most recent revisions thereof and ASCE 24 and 34 PA Code (Chapters 401-405 as amended) shall be utilized, where they are more restrictive.

b) Non-residential Structures

i. In AE Zones, any new construction or substantial improvement of a non residential structure shall have the lowest floor (including basement) elevated up to, or above, the regulatory flood elevation, or be designed and constructed so that the space enclosed below the regulatory flood elevation:

a. Is flood proofed so that the structure is watertight with walls substantially impermeable to the passage of water and,

b. Has structural components with the capability of resisting hydrostatic and hydrodynamic loads and effects of buoyancy.

ii) In A Zones, where no Base Flood Elevations are specified on the FIRM, any new construction or substantial improvement shall have the lowest floor (including basement) elevated or completely flood proofed up to, or above, the regulatory flood elevation determined in accordance with Section 804 B (1) (c) of this Article IV.

iii) Any non-residential structure, or part thereof, made watertight below the regulatory flood elevation shall be flood proofed in

DRAFT

accordance with the WI or W2 space classification standards contained in the publication entitled "Flood Proofing Regulations" published by the U.S. Army Corps of Engineers (June 1972, as amended March 1992) or with some other equivalent standard. All plans and specifications for such flood proofing shall be accompanied by a statement certified by a registered professional engineer or architect which states that the proposed design and methods of construction are in conformance with the above referenced standards. There should be a statement submitted with the permit application and a statement submitted with the as-built Floodproofing Certificate prior to the issuance of the Certificate of Occupancy.

iv) Any non-residential structure that will be floodproofed must submit the following to the Floodplain Administrator along with the non-residential Floodproofing Certificate and prior to the issuance of the Certificate of Occupancy:

a. An Inspection and Maintenance Plan detailing the annual maintenance of floodproofed components ensuring that all components will operate properly under flood conditions. Components that must be inspected include at a minimum:

i. Mechanical equipment such as sump pumps and generators,

ii. Flood shields and closures,

iii. Walls and wall penetrations, and

iv. Levees and berms (as applicable)

D. Flood Emergency Operation Plan detailing the procedures to be followed during a flooding event and must include information pertaining to how all components will operate properly under all conditions, including power failures. The design professional must produce the plan. An adequate plan must include the following:

1) An established chain of command and responsibility with leadership responsibilities clearly defined for all aspects of the plan.

2) A procedure for notification of necessary parties when flooding threatens and flood warnings are issued. Personnel required to be at the building should have a planned and safe means of ingress and should have no other emergency response duties during a flood event. Alternates should be assigned if the primary persons responsible are unable to complete their assigned duties under the plan.

3) A list of specific duties assigned to ensure that all responsibilities are addressed expeditiously. The locations of materials necessary to properly install all floodproofing components must be included in the list.

DRAFT

4) An evacuation plan for all personnel or occupants; those without duties for the flood emergency as well as those with duties for implementing the plan. All possible ingress and egress routes must be identified.

5) A periodic training and exercise program to keep personnel and occupants aware of their duties and responsibilities. Training drills should be held at least once a year and should be coordinated with community officials.

E. The design and construction standards and specifications contained in the 2018 International Building Code (IBC) and in the 2018 International Residential Code (IRC) or the most recent revisions thereof and ASCE 24 and 34 PA Code (Chapters 401-405 as amended) shall be utilized, where they are more restrictive.

1) Space below the lowest floor:

i. If a variance is granted, fully enclosed space below the lowest floor (excluding basement) which will be used solely for the parking of a vehicle, building access, or incidental storage in an area other than a basement, shall be designed and constructed to allow for the automatic entry and exit of flood waters for the purpose of equalizing hydrostatic forces on exterior walls. The term "fully enclosed space" also includes crawl spaces.

ii. Designs for meeting this requirement must either be certified by a registered professional engineer or architect, or meet or exceed the following minimum criteria:

i. A minimum of two openings having a net total area of not less than one (1) square inch for every square foot of enclosed space.

ii. The bottom of all openings shall be no higher than one (1) foot above grade.

iii. Openings may be equipped with screens, louvers, or other coverings or devices provided that they permit the automatic entry and exit of floodwaters.

2) Historic Structures undergoing repair or rehabilitation that would constitute a substantial improvement as defined in this Article IV, must comply with all ordinance requirements that do not preclude the structure's continued designation as a historic structure. Documentation that a specific ordinance requirement will cause removal of the structure from the National Register of Historic Places or the State Inventory of Historic places must be obtained from the Secretary of the Interior or the State Historic Preservation Officer. Any exemption from ordinance requirements will be the minimum necessary to preserve the historic character and design of the structure.

3) Accessory structures

a) Structures accessory to a principal building shall be elevated to the regulatory flood elevation without the addition of fill or flood proofed to remain dry, and shall comply, at a minimum, with the following requirements (a variance is not required):

DRAFT

i. The structure shall not be designed or used for human habitation, but shall be limited to the parking of vehicles, or to the storage of tools, material, and equipment related to the principal use or activity.

ii. Floor area shall not exceed 150 square feet. For accessory structures that are 150 square feet or larger in area (footprint) and that are below the base flood elevation, a variance is required as set forth in Article IV. If a variance is granted, a signed Declaration of Land Restriction (Nonconversion Agreement) shall be recorded on the property deed prior to issuance of the Certificate of Occupancy.

iii. The structure will have a low damage potential.

iv. The structure will be located on the site so as to cause the least obstruction to the flow of flood waters.

v. Power lines, wiring, and outlets shall be elevated to the regulatory flood elevation.

vi. Permanently affixed utility equipment and appliances such as furnaces, heaters, washers, dryers, etc. are prohibited.

vii. Sanitary facilities are prohibited.

viii. Prohibit the storage of Hazardous Materials in accessory structures.

ix. The storage of Hazardous materials is prohibited.

x. The structure shall be adequately anchored to prevent flotation, collapse, and lateral movement and shall be designed to automatically provide for the entry and exit of floodwater for the purpose of equalizing hydrostatic forces on the walls. Designs for meeting this requirement must either be certified by a registered professional engineer or architect, or meet or exceed the following minimum criteria:

a. A minimum of two openings having a net total area of not less than one (1) square inch for every square foot of enclosed space.

b. The bottom of all openings shall be no higher than one (1) foot above grade.

c. Openings may be equipped with screens, louvers, etc. or other coverings or devices provided that they permit the automatic entry and exit of flood waters.

F. Design and Construction Standards

1) Fill - If a variance is obtained to place fill in an Identified Floodplain Area in accordance with the criteria in Section 809, Variances, then the following provisions apply and fill, if used, shall:

i. Consist of the minimum quantity and extent of fill necessary;

DRAFT

ii. Consist of clean fill only - Sanitary Landfills shall not be permitted;

iii. Be compacted and armored or reinforced to provide the necessary impermeability and resistance to erosion, scouring, or settling;

iv. Be no steeper than one (1) vertical to two (2) horizontal feet unless substantiated data justifying steeper slopes are submitted to, and approved by the Floodplain Administrator; and

v. Be used to the extent to which it does not adversely affect adjacent properties.

2) Stormwater Drainage Facilities shall be designed to convey the flow of storm water runoff in a safe and efficient manner in accordance with all applicable Municipal storm water control requirements. The system shall insure proper drainage along streets, and provide positive drainage away from buildings. The system shall also be designed to prevent the discharge of excess runoff onto adjacent properties. The applicable provisions currently enforced in the IBC, shall be utilized.

3) Water and Sanitary Sewer Facilities and Systems

i. If a variance is granted, all new or replacement water supply and sanitary sewer facilities and systems shall be located, designed and constructed to minimize or eliminate flood damages and the infiltration of flood waters.

ii. Sanitary sewer facilities and systems shall be designed to prevent the discharge of untreated sewage into flood waters.

iii. No part of any on-site sewage system shall be located within any identified floodplain area except in strict compliance with all State and local regulations for such systems. If any such system is permitted, it shall be located so as to avoid impairment to it, or contamination from it, during a flood.

iv. The design and construction provisions of the UCC and FEMA #348, "Protecting Building Utilities From Flood Damages" and "The International Private Sewage Disposal Code" shall be utilized.

4) Other Utilities such as gas lines, electrical and telephone systems shall be located, elevated (where possible) and constructed to minimize the chance of impairment during a flood.

5) Streets - The finished elevation of all new streets shall be no more than one (1) foot below the Regulatory Flood Elevation.

6) Parking Lots - The finished elevation of all new parking lots shall be at the Regulatory Flood Elevation.

7) Storage - All materials that are buoyant, flammable, explosive, or in times of flooding, could be injurious to human, animal, or plant life, and not listed in Section 805 D (2), Development Which May Endanger Human Life, shall be

DRAFT

stored at or above the Regulatory Flood Elevation or flood proofed to the maximum extent possible.

8) Placement of Buildings and Structures - All buildings and structures shall be designed, located, and constructed so as to offer the minimum obstruction to the flow of water and shall be designed to have a minimum effect upon the flow and height of flood water.

9) Anchoring

   i. All buildings and structures shall be firmly anchored in accordance with accepted engineering practices to prevent flotation, collapse, or lateral movement;

   ii. All air ducts, large pipes, storage tanks, and other similar objects or components located below the regulatory flood elevation shall be securely anchored or affixed to prevent flotation.

10) Floors, Walls and Ceilings

   i. Wood flooring used at or below the Regulatory Flood Elevation shall be installed to accommodate a lateral expansion of the flooring, perpendicular to the flooring grain without causing structural damage to the building. Plywood used at or below the regulatory flood elevation shall be of a "marine" or "water-resistant" variety.

   ii. Walls and ceilings at or below the regulatory flood elevation shall be designed and constructed of materials that are "water-resistant" and will withstand inundation.

   iii. Windows, doors, and other components at or below the regulatory flood elevation shall be made of metal or other "water-resistant" material.

11) Paints and Adhesives

   i. Paints and other finishes used at or below the regulatory flood elevation shall be of "marine" or "water-resistant" quality.

   ii. Adhesives used at or below the regulatory flood elevation shall be of a "marine" or "water-resistant" variety.

   iii. All wooden components (doors, trim, cabinets, etc.) used at or below the regulatory flood elevation shall be finished with a "marine" or "water-resistant" paint or other finishing material.

12) Electrical Components

   i. Electrical distribution panels shall be at least three (3) feet above the base flood elevation.

   ii. Separate electrical circuits shall serve lower levels and shall be dropped from above.

13) Equipment

DRAFT

i. Water heaters, furnaces, air conditioning and ventilating units, and other electrical, mechanical or utility equipment or apparatus shall not be located below the Regulatory Flood Elevation.

ii. The standards and specifications pertaining to this subsection in the PA UCC, IBC, IRC and ASCE shall be utilized

14) Fuel Supply Systems - All gas and oil supply systems shall be designed to prevent the infiltration of flood waters into the system and discharges from the system into flood waters. Additional provisions shall be made for the drainage of these systems in the event that flood water infiltration occurs.

15) Uniform Construction Code Coordination

i. The Standards and Specifications contained 34 PA Code (Chapters 401-405), as amended and not limited to the following provisions shall apply to the above and other sections and sub-sections of this Article IV, to the extent that they are more restrictive and supplement the requirements of this ordinance.

ii. International Building Code (IBC) 2018 or the latest edition thereof: Sections. 801, 1202, 1403, 1603, 1605, 1612, 3402, and Appendix G.

iii. International Residential Building Code (IRC) 2018 or the latest edition thereof: Secs. R104, R105, R109, R322, Appendix E and Appendix J.

§408 Floodplain Overlay District Existing Lots or Parcels of Record and Newly Created Lots or Parcels

A. Existing Lots or Parcels of Record - In the case where an existing lot or parcel of record is located wholly within an identified flood plain area, or where the useable area of a lot or parcel partially within any identified flood plain area is found to be inadequate for the proposed development. The development may only be permitted by variance in accordance with Section 809, Variances;

B. Newly Created Lots or Parcels

1) All subdivision proposals and development proposals in Identified Floodplain Areas where base flood elevation data are not available, shall be supported by hydrologic and hydraulic engineering analyses that determine base flood elevations and floodway information. The analyses shall be prepared by a licensed professional engineer in a format required by FEMA for a Conditional Letter of Map Revision or Letter of Map Revision. Submittal requirements and processing fees shall be the responsibility of the applicant.

2) After the effective date of this Ordinance, every lot or parcel created for development purposes shall contain an area adequate for the proposed use outside of an identified flood plain area. The subdivision plan and deed for any such lot or parcel shall include a restriction that the lot or parcel shall not be used for any development which does not comply with the Municipal floodplain regulations in effect when such development is proposed;

3) After the effective date of this Ordinance, the subdivision plan and deed for any

DRAFT

lot or parcel created for non-development purposes (i.e., forestry or agriculture) which contains any identified floodplain shall include a restriction that the lot or parcel shall not be used for any development which does not comply with the Municipal floodplain regulations in effect when such development is proposed.

§409 Floodplain Overlay District Existing Structures in Identified Floodplain Areas

A. The provisions of this Article IV do not require any changes or improvements to be made to lawfully existing structures. However, when an improvement is made to any existing structure, the provisions of this section shall apply.

B. Improvements - The following provisions shall apply whenever any improvement is made to an existing structure located within any Identified Floodplain Area:

1) Improvements less than fifty (50) percent of the structure's market value may be made to existing structures, so long as a permit is obtained from the Floodplain Administrator and does not conflict with the provisions of this ordinance.

2) Within any floodway area no new buildings or structures as defined in this Article IV as well as substantial improvements, additions, expansions, or enlargements of existing buildings or structures are permitted. No variances may be granted from this regulation.

3) No modification, alteration, reconstruction, or improvement of any kind to an existing structure shall be permitted which involves any activity which may endanger human life.

4) No expansion or enlargement of an existing structure shall be allowed within any portions of the Identified Floodplain Area that would cause any increase in BFE. In A Area/District(s), BFEs are determined using the methodology in Section 804 B (1) (c).

5) Any modification, alteration, reconstruction or improvement of any kind to an existing structure to an extent or amount of fifty (50) percent or more of its market value, shall constitute a substantial improvement and shall require a variance, and be undertaken only in full compliance with the provisions of this Ordinance.

6) The above activity shall also address the requirements of the 34 PA Code, as amended and the 2018 IBC and the 2018 IRC.

7) Any modification, alteration, reconstruction, or improvement of any kind that meets the definition of "Cumulative Substantial Damage" shall require a variance and be undertaken only in full compliance with the provisions of this Article IV.

§410 Floodplain Overlay District Variances

A. General

1) If compliance with any of the requirements of this Article IV would result in an exceptional hardship to a prospective builder, developer or landowner, the Municipality of Monroeville may, upon request, grant relief from the strict application of the requirements.

DRAFT

2) Requests for variances shall be considered by the Municipality of Monroeville in accordance with the procedures contained in section 803 K and the following:

B. Variance Procedures and Conditions

1) Alternatives Analysis - No variance shall be granted until the applicant has performed an alternative analysis to find practicable alternatives to development in the identified floodplain area;

2) Elevation Required - Any building permitted by variance shall be elevated to the regulatory flood elevation (1.5 feet above the base flood elevation). Within any identified flood plain area, any new construction or substantial improvement of a residential structure or non-residential structure shall have the lowest floor (including basement) elevated up to, or above, the regulatory flood elevation. The regulatory flood elevation is defined as the base flood elevation plus a freeboard safety factor of one and one-half (1.5) feet;

3) Design and Construction Standards - Any development permitted by variance shall comply with the requirements of this Article IV and all other applicable design and construction standards and requirements of the National Flood Insurance Program;

4) Floodway - Within any floodway area no variance shall be granted for any new buildings or structures as defined in this Article IVas well as substantial improvements, additions, expansions, or enlargements of existing buildings;

5) Identified Floodplain Area - No variance shall be granted for any construction, development, use, substantial improvement or activity within any identified floodplain area that would, together with all other existing and anticipated development, cause any increase in the BFE;

6) Accessory Structures – No variance shall be granted for wet floodproofing of accessory structures larger than 600 square feet. For accessory structures between 150-600 sq. ft a non-conversion agreement shall be recorded on the property deed prior to the issuance of the variance.

7) Least Modification - If granted, a variance shall involve only the least modification necessary to provide relief;

8) Conditions - In granting any variance, the Municipality shall attach whatever reasonable conditions and safeguards it considers necessary in order to protect the public health, safety, and welfare, and to achieve the objectives of this Ordinance;

9) Developments of Special Concern - No variance shall be granted for any prohibited development (Section 805 D);

10) Written Notice - Whenever a variance is granted, the Municipality shall notify the applicant in writing that:

a) The granting of the variance may result in increased premium rates for flood insurance: and

DRAFT

b) Such variances may increase the risks to life and property.

11) Review Factors - In reviewing any request for a variance, the Municipality shall consider, at a minimum the following:

a) That there is good and sufficient cause.

b) That failure to grant the variance would result in exceptional hardship to the applicant.

c) That the granting of the variance will:

i) Neither result in an unacceptable or prohibited increase in flood heights, additional threats to public safety, or extraordinary public expense;

ii) Nor create nuisances, cause fraud on, victimize the public, or conflict with any other applicable state or local ordinances and regulations.

12) Record - the Municipality shall maintain a complete record of all variance requests and related actions. In addition, a report of all variances granted under this section shall be included in the required reports to the Federal Emergency Management Agency.

13) Notwithstanding any of the above, however, all structures shall be designed and constructed so as to have the capability of resisting the one-percent (1%) annual chance flood.

§410 Purpose of Landslide Prone Overlay (LSO) District

A. Purpose - The Landslide-Prone Overlay District regulations, or the LSO, Landslide-Prone Overlay District, as identified by the Allegheny County Conservation District maps or other applicable sources, require subsurface investigations by a registered professional and approval of construction plans by the Municipal Engineer prior to issuance of a zoning permit for any development in the LSO District. The purpose of these regulations is to reduce the risk of damage or hazards to life that may occur as a result of construction and land operations on lands susceptible to movement or sliding of earth;

B. Disclaimer - The mapped delineations of land that may be subject to sliding or subsidence do not necessarily include all land that is subject to those hazards. While it is the purpose of the regulations contained in this section to afford reasonable protection against damages caused by construction on or use of hazard-prone land, neither the mapped delineations nor any regulations contained in this section shall create any liability on the part of the Municipality, its officers or employees for damages that may occur.

§411 Effect of Landslide Prone Overlay (LSO) District Regulations

A. Within the LSO District, land may be used and structures may be erected, altered or enlarged for any use that is allowed in the underlying zoning district, in accordance with the site development standards of the underlying zoning district and all other applicable requirements. The following requirements shall also apply with the LSO District;

DRAFT

1) Review by the Zoning Officer - No Zoning Permit application shall be approved for zoning of any structure or for any use of land requiring excavation, fill or removal of vegetation until the applicant has submitted evidence, acceptable to the Zoning Officer, that the proposed construction or development shall not contribute to or create conditions of increased susceptibility to landslides, soil erosion or any other movement of earth. Such evidence shall be based on field investigation performed by a registered professional or a geotechnical consultant with appropriate professional insurance certification and the appropriate academic credentials and professional association; and

2) Review by the Municipal Engineer - No building permit or land operations permit application shall be approved for any structure or for any use of land requiring excavation, fill or removal of vegetation in a Landslide-Prone Overlay District until the Municipal Engineer, based on findings and recommendations of the required site investigation, has approved construction plans and land operations plans for the site in question. In the implementation of this requirement, the Municipal Engineer may require that a geotechnical investigation, construction and land plans, be prepared or approved by a registered professional or a geotechnical engineer with appropriate professional insurance certification and the appropriate academic credentials and professional association.

§412 Purpose of Steep Slope Overlay (SSO) District

The purpose of the SSO District is to recognize the importance of the Municipality's steep slopes in defining the character of Monroeville; to assure that any steep slope site is appropriate for development considering natural site limitations, associated hazards, public safety, and the need to provide public services and infrastructure; and to assure that the design of the proposed development responds to the site's limitations and attributes. In addition to the requirements listed below, the Land Disturbance Ordinance (Ord. 2651) and the Subdivision and Land Development Ordinance (Ord. 2525) should also be referenced for additional requirements and regulations.

§413 Development on Slopes in the Steep Slope Overlay (SSO) District

A. Applicability - To ensure that development occurs in a manner that protects the natural and topographic character of slopes twenty-five percent (25%) or greater, all uses and structures permitted in the underlying district shall be reviewed and approved by the Municipality pursuant to the procedures of this section.

B. Application - All applicants for review in the SSO District shall first file an application with the Zoning Officer, along with a nonrefundable fee that has been established to defray the cost of processing applications. No application shall be processed until the Zoning Officer has established that the application is complete and the required fee has been paid.

C. Hearing and Action by Council - After Planning Commission makes its recommendation; Council shall hold a Public Hearing on the application for development in the SSO District. After the public hearing, Council shall act to approve, approve with conditions, or deny the application based on the SSO Review Standards within forty-five (45) days of the Council hearing. When the Council fails to render its decision within that period, or fails to hold the required public hearing within sixty (60) days from the date of the completed application being received by the Zoning Officer, the decision shall be deemed to be rendered in favor of the applicant unless the applicant has agreed in writing or on the record to an extension of time. When a decision has been rendered in favor of the applicant because of the failure of the Council to meet or render a decision as

DRAFT

hereinabove provided, the Municipality shall give public notice of said decision within ten (10) days from the last day it could have met to render a decision in the same manner as required by the provisions of the MPC. Nothing in this subsection shall prejudice the right of any party opposing the application to appeal for reconsideration.

D. Notice - Promptly upon determining that an application is complete, the Zoning Officer shall schedule Public Hearing dates before Council, notify the applicant of the hearing dates and give at least fourteen (14) days' notice of the Council hearing by mail and by posting, in accordance with the public notice requirements of the MPC and with notice to all owners of record of property within the affected area and within three hundred (300) feet thereof, or to such extended distance to ensure that no fewer than the twenty-five (25) nearest owners of record are so notified in writing.

E. Review Standards - The following standards shall apply to all development within the SSO, Steep Slope Overlay District:

1) The scale of the structure shall be consistent with proximate structures of the same use

2) The Municipality or its Engineer may require the preparation of a geotechnical investigation report (including testing) as a part of any development in the SSO District.

3) Attached single-family residential units shall employ architectural, materials, or color variations to allow the units to read as individual units;

4) The proposed development shall minimize impervious surfaces;

5) The proposed development shall employ foundations that include ground contours, embankments, vegetation or other such measures;

6) Development shall be set back fifty (50) feet in both directions from the edge of the SSO boundary when it occurs at either the Ridgeline or Base;

7) Parking areas shall be internal to the primary structure or screened from view through vegetation or architectural features;

8) Utilities and mechanical equipment (including but not limited to HVAC equipment) and storage areas (refuse or otherwise) shall be screened from view;

9) All on-site lighting shall be shielded to prevent light spillover onto adjacent properties;

10) Vegetation removal solely to create views is prohibited. Views to the site shall be considered to be as important as views from the site;

11) The proposed structure shall minimize the need for vegetation removal with the exception of invasive species;

12) Vegetation with similar appearance and growing requirements as existing proximate vegetation (excepting invasive species) or native species shall be employed in re-vegetating the site;

DRAFT

13) Natural drainage patterns shall be maintained to the extent physically possible;

14) Storm water runoff from impervious surfaces shall be collected and transported from the site rather than directed or allowed to flow onto adjacent properties or rights-of-way;

15) Storm water detention will be required for all development, regardless of size. Designs relying upon infiltration must recognize and address concerns regarding the effect of additional subsurface water on slope stability--Refer to Ordinance 2700 Comprehensive Stormwater Management;

16) To the maximum extent feasible, site grading shall preserve the natural landforms of the site;

17) To the maximum extent feasible, cutting, filling and severe benching or terracing of existing slopes to create additional building area or larger building sites shall be avoided;

18) Finished grades of fifteen percent (15%) or less are strongly encouraged. Cut or filled slopes shall not exceed fifty percent (50%) unless:

    a) The applicant submits a geotechnical investigation report that certifies the safety and suitability of such slopes; and

    b) The applicant proposes the use of walls, terraces, or other methods at intervals of not less than ten (10) feet to create planting beds that will stabilize the slope, and such measures are approved in the geotechnical investigation report as sufficient to ensure the stability of the slope and ensure that such slope shall pose no significant risk of danger to any property or public improvements located on or off the proposed development site.

19) The top and bottom of the cut or filled slopes shall be located no less than five (5) feet from any property line, street, building, parking area, or other developed area;

20) Retaining walls or gabions may be permitted to support steep slopes, but shall not exceed ten (10) feet in height;

    a) The proposed operation shall meet all requirements of the Municipal Land Disturbance Ordinance No. 2651;

    b) Retaining walls shall follow the existing hillside contours if physically feasible and shall avoid visible unnatural straight slope faces. Walls shall be of a color that is compatible with natural rock outcroppings that occur on Monroeville hillsides. The International Residential Code (IRC) requires a minimum 36-inch-high guardrail for all decks, balconies, or screened enclosures more than 30 inches off the ground--including retaining walls;

21) Slopes in excess of a fifteen-percent grade (15%) that are exposed during construction or site development shall be landscaped or re-vegetated in order to mitigate adverse environmental and visual effects. Fill soil on slopes must support plant growth. At a minimum, any slope in excess of fifteen-percent grade

DRAFT

(15%) exposed or created during development shall be landscaped or re-vegetated, based on field investigation performed by a registered professional or a geotechnical consultant with appropriate professional insurance certification and the appropriate academic credentials and professional association.

22) Gabions and low walls shall be utilized to gain planting pockets on steep grades.

23) The Zoning Officer shall require the protection and preservation of trees with a diameter of twelve (12) inches or more, measured at four and one-half (4.5) feet (1.37m) above the forest floor. If said trees are removed during site preparation or development, they shall be replaced, at a minimum, equal to the combined Diameter at breast height of removed trees. Diameter measurements shall be taken at four and one-half (4.5) feet (1.37m) above the forest floor.

24) On slopes, twenty-six percent (26%) to thirty-five percent (35%) the development shall remain a minimum of eighty percent (80%) unaltered open space.

25) All grading operations (regardless of slope) shall meet the criteria set forth in the Municipal Land Disturbance Ordinance 2651.

A. Slopes Exceeding 35 Percent - Limited development on slopes of greater than thirty-five (35%) (before development) may be permitted for the following purposes only:

1) Public Facilities and Utilities

a) Public facilities (including streets) and utilities may be allowed on slopes greater than thirty-five percent (35%) (before development), if designed such that these improvements avoid slopes exceeding thirty-five percent (35%) (before development) to the maximum extent possible. Public streets or access ways may be developed on slopes over thirty-five percent (35%) (before development) if the street location is necessary to provide street connectivity or for emergency vehicle access. Construction of public streets shall comply with maximum grades as specified in the Municipality's Roadway Standards;

b) Public facilities (including streets) and utilities may be constructed as described above if the following specific determination is made by a registered professional:

i. That the facilities can be constructed given the geologic condition of the area of development; and

ii. That the facilities can be constructed in a manner to minimize the potential for earth movement and erosion.

2) Open Space Development

a) Open spaces and conservation easements may be improved with public or private walking/hiking trails, or with public or private multi-use paths, subject to the determination of a registered professional engineer. Public trails or paths shall be limited to public open spaces, and private trails or paths shall be limited to private open spaces and conservation easements.

DRAFT

3) Preservation of Slopes Greater than 35 Percent

a) All areas exhibiting slopes of thirty-five percent (35%) or greater (before development), not developed, shall be preserved by easement (public or private). If preservation is proposed to be private, it can be either by tract or as a part of an individual lot (with an easement overlay). Public preservation shall be by tract only. Easement types shall be conservation, open space, or public trail easements. The type of easement appropriate for preservation of the excessively steep slopes shall be at the discretion of the Municipality. Acceptance of proposed dedication of open space shall be at the Municipality's discretion;

4) Lots of Record

a) Lots of record may be improved with a maximum of one dwelling unit on slopes over thirty-five percent (35%) (before development) with a finding that there is not a sufficient and accessible, land area on less than thirty-five percent (35%) slope (before development) for the proposed dwelling.

B. Amendments - The process for amending an approved development within the SSO, Steep Slope Overlay District shall be the same as required for the approval of an original application;

C. Lapse of Approval - Site plan approval shall be valid for a period of one (1) year following Council action. If the proposed improvements are not under construction within one (1) year or completed within two (2) years, Council approval shall be void.

§414 Purpose of Medical Overlay (MO) District

The purpose of the Medical Overlay (MO) District is to promote a medical campus setting by creating specific development standards for hospital and medical uses within the District's boundaries, thus promoting full-service hospital facilities and related medical services within the Municipality. The Medical Overlay (MO) District is established for the purpose of accommodating a concentration of health care, retail, and commercial office uses, combined with residential dwellings within a campus-like setting. It is anticipated that expansion of health care services and related structures will take place within the boundary of the Medical Overlay (MO) District to encourage growth and viability of the hospital, which is expected to provide related employment, growth and expansion of the tax base, and provision of high quality health care for the residents of the Municipality and surrounding areas.

The Medical Overlay (MO) District also allows for the continuation and flexible expansion of the hospital, medical clinics and associated uses in a planned and coordinated manner. Flexibility is essential to allow existing and future uses to respond and adapt to changes in technology, the medical profession, and society as a whole. The primary uses in the Medical District Overlay Zone are hospitals and other medical clinics and uses. Related uses may be located within the hospital or clinic buildings or as independent uses within the overlay zone area. The overlay zone is intended to enhance the underlying zone.

§415 Medical Overlay (MO) District Development Regulations

A. Within the Medical Overlay (MO) District, land may be used and structures may be erected, altered or enlarged for any use that is allowed in the underlying zoning district, in accordance with the site development standards of the underlying zoning district and all other applicable requirements.

DRAFT

B. Permitted Uses:

1) Medical and health care uses including hospitals, outpatient clinics, continuing/long term care services, hospice services, laboratories, medical, research facilities, urgent or emergency medical services, offices of, doctors, physical therapists, dentists and other health care providers;

2) Medical staff facilities and similar uses, including but not limited to, administrative offices, educational and meeting facilities and staff sleeping, quarters;

3) Child care and adult care services, including respite care;

4) Short term residential uses dependent upon or directly related to medical care, including convalescent care facilities, skilled nursing facilities, group; homes for the disabled and overnight accommodations;

5) Health care related retail (i.e. pharmacy, medical supplies and equipment);

6) Miscellaneous retail trade including gift stores, bookstores, news stands, florist, jewelry, video sales/rentals, and other retail ancillary to and located within a medical services facility;

7) Cafeterias and food service within health care buildings and stand alone restaurants on the following conditions:

   a) The maximum square footage is 4,000 square feet;

   b) There is no drive thru window; and

   c) No stand alone restaurant may be developed until 30% of the land area is developed for other permitted uses.

8) Social service providers including counseling centers and alcohol and drug treatment facilities.

9) Multi-family residential uses including apartments, townhouses and two-family homes.

C. Dimensional requirements shall be regulated by the underlying district, however, the following requirements may apply to Medical Use Developments within the Medical Overlay (MO) District:

1) Surface Parking Setbacks

Lots abutting residentially used property:
Minimum yard setbacks

IS 20' ADEQUATE???

Front:	Ten (20) feet
Side:	Ten (20) feet
Rear:	Ten (20) feet

DRAFT

Lots abutting non-residentially used property:
Minimum yard setbacks

Front:	Zero (10) feet
Side:	Zero (15) feet
Rear:	Zero (0) feet

2) Minimum Yard Setbacks (for buildings and structures)

   a) For a non-residentially used lot abutting a residential district, the following minimum setbacks shall apply to all non-residential uses:

IS 30' ADEQUATE???

Front:	Twenty (30) feet
Side:	Twenty (30) feet
Rear:	Twenty (30) feet

3) If a zoning lot is separated from a residential district by a street, there shall be a ten (10)-foot minimum setback on the side of the zoning lot facing the residential district.

   a) For a non-residentially used lot abutting or located within a Medical Overlay (MO) District, the following setbacks shall apply:

Front:	Zero (0) feet
Side:	Zero (0) feet
Rear:	Zero (0) feet

DEFINITION NOTE: For the purpose of this subsection, the term "abutting" does not apply to property that is across a street, alley or road easement from the subject property.

4) Building Height

   a) Maximum building height: six (6) stories, seventy-five (75) feet. Additional building height up to an additional fifteen (15) feet may be permitted for mechanical equipment and roof appurtenances. All rooftop mechanical equipment shall be screened from view by a parapet wall or other decorative screening method based on the goal of completely obscuring the view of the rooftop equipment by a 5'10" tall person standing at grade level within 100' of the building.

5) Maximum Lot Coverage

   a) Maximum lot coverage shall be regulated by application of required minimum setbacks, not by a specified percentage.

6) Landscaping and Buffering

   a) A buffer area shall be provided when a non-residential use abuts a residentially used lot that is not in the Medical Overlay (MO) District.

      i. The objective of the Buffer is to screen hospital structures, noise, and light that emanates from vehicles, buildings and site lighting

DRAFT

fixtures, while providing an aesthetically pleasing, diversely vegetated viewscape and safe walking environment for pedestrians;

ii. Site amenities and landscape features shall be designed to be compatible with abutting neighborhood character;

iii. Landscaping shall provide tree canopy shading of paved surfaces, supplemented with additional plantings along internal walkways, and landscaping or walls or fences to screen views of driving and parking surfaces;

iv. A tiered height screening approach shall be provided on the side of a zoning lot facing residentially-zoned property located outside of the Medical Overlay (MO) District. A minimum of 1) an evergreen buffer of closely spaced trees, or 2) a decorative 6 foot (6') high fence, or 3) a six-foot (6') high decorative screen wall is required in the MO District when abutting residentially zoned property. Large canopy deciduous trees spaced a minimum of forty lineal feet, on average, and sized at three-inch caliper or greater shall supplement evergreen and/or wall/fence requirements to provide screening at varying heights;

v. For locations where noise buffering is determined by the Planning Commission to be necessary, the use of a six-foot (6') high decorative screen wall instead of other screening options noted above shall be provided. The wall shall be supplemented with large canopy deciduous trees (three-inch minimum caliper) planted every forty (40) lineal feet, on average, along the perimeter where the wall is placed to improve the overall appearance and visual height of the screening. The Planning Commission may approve a six-foot (6') high landscaped berm in lieu of a decorative wall when it determines that it would be a more appropriate screening technique directly adjacent to residentially-zoned property. The berm shall also include other plantings to provide an effective visual screen at varying heights;

vi. Vehicle and pedestrian wayfinding shall be provided at appropriate locations through signage and other visual cues to facilitate orderly movement to, in, and from the MO District;

vii. Full cut-off lighting shall be used throughout the development site, and house-side shields shall be used to prevent light spillover onto residentially-zoned properties;

viii. If used, retaining walls should be designed to reduce their visual impact while maximizing safety elements. Consider use of masonry, concrete or other textured material with terracing and landscaping to reduce the visual impact of retaining walls;

b) Street frontage edge. A street frontage edge shall be provided when a non-residential use is located across the street from a residentially used lot that is not in the Medical Overlay (MO) District.

DRAFT

i. The objective of the street frontage edge is to partially screen hospital structures and parking from residential areas located across a street;

ii. Site amenities and landscape features shall be designed to be compatible with adjacent neighborhood character;

iii. Vehicle and pedestrian wayfinding shall be provided at appropriate locations through signage and other visual cues to facilitate orderly movement to, in, and from the Medical Overlay (MO) District;

iv. Exterior lighting shall be designed for safety and uniform light distribution, including the use of full cut-off fixtures in all pole and building-mounted lighting;

v. Landscaping and signage are encouraged at primary public campus entrances to provide visual emphasis and ease of identification for both drivers and pedestrians;

vi. Architectural elements, streetscape amenities and works of art are permitted at primary public campus entrances;

vii. Parking lots and vehicular circulation areas shall be screened by a hedgerow, decorative fence or decorative wall. The area from the ground to a minimum height of two feet shall be totally obscured from the public street. If a wall or fence is provided, the setback area shall contain a planting strip abutting the wall or decorative fence. Small shrubs, ornamental grasses, and small, flowering plants are appropriate in these locations. Parking spaces directly abutting the perimeter of a street frontage edge shall have landscape islands planted with large (three-inch caliper minimum) deciduous trees. These islands, should be strategically placed within the parking lot to provide a dual benefit of shading parking spaces and enhancing the perimeter buffer of the Medical Overlay (MO) District;

viii. Enhanced sidewalk systems with decorative paving consistent with the hospital's approved paving palette are permitted;

ix. Benches are permitted at appropriate locations along primary pedestrian pathways.

c) Transition edge. A transition edge shall be provided when a non-residential use is located adjacent to or across the street from a non-residentially used lot.

i. The objective of the transitional edge is to allow for minimally screened hospital structures and parking. The least extensive landscaping and buffer elements may be utilized at this edge;

ii. Vehicle and pedestrian wayfinding shall be provided at appropriate locations through signage and other visual cues to

DRAFT

facilitate orderly movement to, in, and from the Medical Overlay (MO) District;

iii. Exterior lighting shall be designed for safety and uniform light distribution, including the use of full cut-off fixtures in all pole and building-mounted lighting;

iv. Parking lots and vehicular drives shall be screened from streets in accordance with the hedgerow or decorative wall provisions noted above;

7) Transportation Management. Medical uses are high traffic generating uses. Reducing the number of trips to the development creates a benefit to the municipality through less demand on the transportation system. To encourage employers within the Medical Overlay (MO) District; the following incentive is offered:

a) The employee parking component of each use may be reduced by up to 10% if the employer establishes a permanent commute trip reduction program that offers employees incentives such as transit passes, shuttle services or other similar programs to reduce the number of single occupant vehicles traveling to and from the site.

8) Satellite Parking / Ancillary Parking-- If the required number of off-street parking spaces cannot reasonably be provided on the same lot where the principal use associated with these parking spaces is located, then parking spaces may be located on a lot other than that containing the principal use pursuant to the provisions below. These off-site spaces are referred to in this section as satellite parking spaces.

a) All such satellite parking spaces (except spaces intended for employee use) must be located within two hundred and fifty (250) feet of the lot on which the principal use associated with such parking is located;

b) Walking paths shall be provided between the principal use and the parking lot. Such paths shall not cross streets except at designated crosswalks;

c) All such parking spaces must be located in a zoning district that permits the principal use;

d) A shared parking plan shall be enforced through written agreement. An attested copy of the agreement between the owners of record shall be submitted to the municipality who shall forward a copy to the Municipal Solicitor for review and approval. Proof of recordation of the agreement shall be presented to the municipality prior to issuance of a certificate of occupancy. The agreement shall:

i) List the names and ownership interest of all parties to the agreement and contain the signatures of those parties;

ii) Provide a legal description of the land;

iii) Include a site plan showing the area of the parking parcel;

iv) Describe the area of the parking parcel and designate and reserve it for shared parking unencumbered by any conditions which would interfere with its use;

v) Agree and expressly declare the intent for the covenant to run with the land and bind all parties and all successors in interest to the covenant;

vi) Assure the continued availability of the spaces for joint use and provide assurance that all spaces will be usable without charge to all participating uses; and

vii) Describe the method by which the covenant shall, if necessary, be revised.

e) If the agreement expires, each owner shall provide the required parking spaces for their principal use.

~ END OF SECTION ~

DRAFT

THIS PAGE INTENTIONALLY LEFT BLANK

DRAFT

§501 Applicability
§502 Procedure for Conditional Use Applications
§503 General Standards and Criteria
§504 Specific Standards and Criteria for Conditional Use

§501 Applicability

A. Applications for conditional uses, when listed as permissible by the Zoning Ordinance, shall be approved or denied by the Council in accordance with the standards and criteria of this Article; and

B. Conditional uses are unique and their effect on the surrounding environment cannot be determined in advance of the use being proposed for a particular location. At the time of application, the Planning Commission shall conduct a review of the location, design, configuration and potential impact of the proposed use by comparing the use to established development standards and design guidelines. This review shall determine whether the proposed use addresses the general and specific standards and criteria identified in this Article and whether it should be permitted, by weighing the public need for and the benefit to be derived from, the use against the impact which it may cause.

§502 Procedure for Conditional Use Applications

A. Application Procedure

1) An application for conditional use approval shall be filed with the Zoning Officer, on forms prescribed by the Municipality, at least thirty (30) days prior to the date of the regular meeting of the Planning Commission. A conditional use application shall not be considered to be administratively complete until all items required by this Article, including the application fee and deposit, have been received by the Municipality;

2) The Zoning Officer shall review the application to determine whether the applicant has submitted all materials required by this Article. If all such materials have not been submitted by the applicant, then the Zoning Officer shall reject the application as administratively incomplete and shall notify the applicant, in writing, citing the specific deficiencies and the specific requirements of this Article that have not been met;

3) Within fifteen (15) days of receipt of an administratively complete application, the Zoning Officer shall submit one (1) copy of the application and any materials submitted therewith to the Municipal Engineer and any Municipal staff and professional consultants deemed necessary by the Municipality;

4) The Zoning Officer shall submit one (1) copy of an administratively complete application and any materials submitted therewith to each member of the Planning Commission;

5) The Planning Commission shall review the application and forward its recommendation to Council within thirty (30) days unless the petitioner agrees in writing to a time extension. Failure to act within the allotted time shall be deemed to be a favorable recommendation;

DRAFT

6) Council shall hold a public hearing, pursuant to public notice, within the times and procedures required by the MPC. The public hearing shall commence within sixty (60) days of the filing of an administratively complete application. Public hearings shall be conducted and held in accordance with the applicable provisions of the MPC;

7) Council shall render a written decision on the conditional use application within forty-five (45) days of the last hearing. Where the application is contested or denied, Council's decision shall be accompanied by findings of fact and conclusions based thereon, together with any reasons therefore. Conclusions based on any provisions of the Zoning Ordinance or any other rule, regulation, ordinance or statute shall contain a reference to the provision relied upon and the reasons why the conclusion is deemed appropriate in light of the facts found;

8) In granting a conditional use pursuant to the Zoning Ordinance, Council may impose any reasonable conditions it believes are necessary to ensure compliance with the Zoning Ordinance, the Subdivision and Land Development Ordinance, the Municipal Code of Ordinances and all other ordinances of the Municipality, as it otherwise deems necessary to implement the purposes of the Zoning Ordinance and the MPC;

9) A copy of the final decision, or, where no decision is called for, of the findings, shall be delivered to the applicant personally or mailed to him no later than the day following the date of the decision;

10) All development, construction and use shall be in accordance with the approved conditional use decision and plan, unless a revised conditional use plan is submitted and approved. The approved conditional use plan shall consist of the application, as submitted, together with all its attachments and exhibits, as finally approved by Council and the conditions attached by Council. Any development contrary to the approved conditional use decision and plan shall constitute a violation of this Article;

11) Conditional use approval shall expire automatically without written notice to the applicant if no application for Subdivision and Land Development, zoning approval for structural alteration or erection of structures, zoning approval for occupancy and use or a grading or building permit to undertake the work described in the conditional use approval has been submitted within twenty-four (24) months of said approval or as otherwise provided by applicable state law; and

12) Conditional use approvals, granted prior to the effective date of this ordinance, shall expire automatically without written notice to the applicant if no application for Subdivision and Land Development, zoning approval for structural alteration or erection of structures, zoning approval for occupancy and use or a grading or building permit to undertake the work described in the conditional use approval has been submitted within twenty-four (24) months of the effective date of this ordinance or as otherwise provided by applicable state law.

B. Application Content

1) An application for approval of a conditional use shall include the following:

DRAFT

a) One (1) original application form completed by the applicant. If the applicant is other than the landowner, the landowner's authorization of the applicant to apply and the nature of the applicant's interest in the site shall accompany the application;

b) Ten (10) full-scale copies (folded) and ten (10) half-scale copies of all required plans, maps and drawings; and

c) Fifteen (15) copies of all other required application materials.

2) All applications for conditional use approval shall contain the following:

a) A development plan, as defined by the Zoning Ordinance;

b) A legal document verifying the applicant's legal interest in the subject property (i.e. deed, sales agreement or lease);

c) The application fee and deposit in an amount set from time to time by Ordinance by the Municipality; and

d) When renovations or modifications of an existing building are contemplated, construction plans depicting the scope, nature and extent of said renovation or modifications.

§503 General Standards and Criteria for Conditional Use

Before approving a conditional use application, Council shall determine that the proposed use complies with the following general standards and criteria, which are in addition to any other requirements in this Article for a specific type of use or development:

A. The proposed use shall not alter the established character and use of the neighborhood or district in which it is located and will not substantially impair the use or development of adjacent properties;

B. The proposed use shall conform to the district and Conditional Use Provisions and all general regulations of this Ordinance;

C. The establishment, maintenance, location and operation of the proposed use shall not be detrimental to or endanger the public health, safety, morals, comfort or general welfare;

D. The proposed use complies with all applicable provisions and requirements for that type of use contained in this Article (unless a variance to any provision has been granted by the Zoning Hearing Board and all other applicable governmental agencies, statutes, ordinance and regulations, including, but not limited to, the Subdivision and Land Development Ordinance, the Storm water Management Ordinance and the Municipal Code of Ordinances;

E. The proposed use shall not involve any element or cause any condition that may be dangerous, injurious, or noxious to any other property or persons, and shall comply with the Performance Standards of Section 815;

F. The proposed use is compatible with surrounding land uses. It does not have a negative impact on the existing neighborhood or development in terms of air and water quality,

DRAFT

noise, illumination and glare, restrictions to natural light and air circulation or other hazardous conditions that could endanger surrounding residents or impair the use of surrounding properties;

G. The proposed site of the conditional use is suitable in terms of topography, soil conditions and size, based on the number of projected users and the frequency of use of the proposed use;

H. The proposed use and site provide for safe, adequate vehicular and pedestrian access. It has access from a street capable of handling the traffic generated by the proposed use, and it will not result in undue traffic congestion and hazardous conditions on adjacent streets. The proposed use provides for safe and efficient internal circulation and sufficient off-street parking and loading;

I. The proposed use complies with all applicable standards and requirements for providing storm water management and solid and toxic waste storage and disposal; and

J. The proposed use provides landscaping, screening and buffer yards sufficient to protect the use, enjoyment and development of adjacent properties.

§504 Specific Standards and Criteria for Conditional Use

In addition to the general standards listed in §503, the Municipality shall determine that the proposed use complies with specific standards and criteria before approval of a conditional use application.

A. Agricultural Farm

1) The minimum lot size shall not be less than ten (10) contiguous acres;

2) A parking analysis study shall be required;

3) The owner/operator of the facility shall incorporate all stormwater management design standards as required pursuant to the Municipality of Monroeville Storm Water Management Ordinance 2700;

4) The owner/operator must comply with Table 902, Off Street Parking Requirements;

5) The owner/operator must comply with all governmental agencies, laws and regulations;

6) All mechanical equipment shall be screened from the view of adjoining properties;

~~5)~~7) All waste collection/storage areas shall be located at least fifty (50) feet from the nearest building and shall be enclosed by a solid screen;

~~6)~~8) Agricultural sales shall be permitted provided that:

a) All sales shall be conducted on the premise;

DRAFT

b) Products sold shall include only products raised, grown or produced on the farm;

c) Seasonal roadside stands shall be located no closer than forty (40) feet to any street right of way, fifteen (15) feet from all side and rear property lines, and shall be removed at the end of the growing season;

d) Adequate ingress, egress and traffic circulation shall be provided so that vehicles do not back onto the street right of way and do not park or stand on any street or berm;

e) A maximum of two (2) signs may be located on the premises, and each sign shall not be greater than thirty-two (32) square feet in size and shall be removed at the end of the growing season; and

f) Seasonal activities such as, hay rides, spring and fall festivals must comply with the Municipal Special Events Policies and Procedures Ordinance.

g) All mechanical equipment shall be screened from the view of adjoining properties;

~~f)~~h) All waste collection/storage areas shall be located at least fifty (50) feet from the nearest building and shall be enclosed by a solid screen;

~~7)~~9) Animal Husbandry shall be permitted provided that:

a) The keeping and raising of livestock on parcels ten (10) acres in area (or larger) shall be subject to the rules and regulations of the Pennsylvania Department of Agriculture;

b) The raising of garbage-fed pigs and ferrets is not permitted;

c) The raising of animals for fur or skins shall not permitted; and

d) Riding academies, livery or boarding stables is not included in this use.

e)

~~8)~~10) Stables shall be permitted, provided that:

a) All stables or other buildings used for the sheltering, keeping, raising or feeding of horses or livestock shall be located at least two hundred (200) feet from all property lines;

b) All grazing and pasture areas shall be adequately fenced to enclose the animals and protect adjacent property. No grazing shall be permitted within ten (10) feet from all property lines. Exercising of horses shall not be permitted on public streets or public lands;

c) The number of horses maintained in a private stable shall be limited to one (1) horse for the first five (5) acres, and one (1) additional horse for

DRAFT

each additional acre up to ten (10) acres, not to exceed a total of six (6) horses; and

d) Storage of manure, odor or dust producing substances shall be located at least two hundred (200) feet from all property lines.

e) All mechanical equipment shall be screened from the view of adjoining properties;

f) All waste collection/storage areas shall be located at least fifty (50) feet from the nearest building and shall be enclosed by a solid screen.

B. Alcohol Treatment Facility

1) *See "Substance Abuse Facility*."

C. Amusement Use

1) A traffic impact study and a parking demand analysis shall be required;

2) The site shall have frontage on and direct vehicular access to a public road;

3) Ingress, egress, and internal traffic circulation shall be designed to minimize congestion during peak usage of the facility;

4) A landscaped strip shall screen all property lines, which adjoin residential uses or residential zoning districts, at least fifty (50) feet in depth, which shall be comprised of a combination of high level and low-level plantings. Such screening shall be a minimum of six (6) feet in height for high level and two (2) feet in height for low level plants at the time of installation. Existing vegetation shall be used to meet these criteria at the discretion of the Municipality;

5) The private living areas and associated open spaces of all adjacent residential properties shall be effectively screened as per §808;

6) No direct beams or rays of light from exterior lighting fixtures, signs or vehicles maneuvering on the development site, shall be permitted to shine into the private living areas and associated open spaces of adjacent residential properties;

7) Access for the site shall be provided from nonresidential streets; and

8) Location of buildings and structures, traffic circulation, and parking lots shall be designed to provide adequate access for emergency medical vehicles and firefighting equipment.

9) All mechanical equipment shall be screened from the view of adjoining properties;

10) All waste collection/storage areas shall be located at least fifty (50) feet from the nearest building and shall be enclosed by a solid masonry screen wall.

D. Apartment

1) A traffic impact study shall be required;

DRAFT

2) Parking spaces shall be located no more than three hundred (300) feet from the primary entrance of the apartment building;

3) Where two (2) or more buildings exist on the same lot, the minimum distance between buildings shall be twenty (20) feet or fifty percent (50%) of the height of the taller building, whichever is greater;

4) The primary vehicular entrance to the apartment shall have direct access to a public street;

5) A twenty (20)-foot wide fire/emergency access route shall be provided around the perimeter of each building;

6) All mechanical equipment shall be screened from the view of adjoining properties;

7) All off-street parking areas adjacent to a single-family dwelling or property in any Residential Zoning District shall be screened by a minimum six (6) foot high compact evergreen hedge; and

8) All waste collection/storage areas shall be located at least fifty (50) feet from the nearest building and shall be enclosed by a solid masonry screen wall.

E. Assisted Living Facility Also see: *"Continuing Care Facility", "Hospice", "Nursing Home Facility", "Skilled Nursing Facility".*

1) A traffic impact study shall be required;

2) An Assisted Living Facility shall be located on property, which consists of one or more Lots and contains a minimum of one (1) acre. If more than one Lot or parcel is used, they must be contiguous. An Assisted Living Facility occupying more than one Lot or parcel shall obtain Subdivision approval consolidating such Lots;

3) All structures shall be set back a minimum of forty (40) feet from all property lines;

4) The site shall have frontage on and direct vehicular access to a public road;

5) Shall not be approved unless plans prepared by an architect or engineer are submitted which clearly indicate that adequate light, ventilation and fireproofing are provided;

6) The dwelling facility and its accommodations shall be functional and convenient with regard to the specific needs of the group to be housed in the facility;

7) Shall be approved only after Council has found that plans and programs for management of the dwelling are adequate and appropriate to the population to be housed and that adequate provisions have been made to assure the safety and welfare of the residents of the facility and of the adjacent neighborhood;

8) All mechanical equipment shall be screened from the view of adjoining properties;

9) The Lot Coverage by all Principal and Accessory Buildings shall not exceed forty percent (40%);

DRAFT

10) Ingress, egress, and internal traffic circulation shall be designed to ensure access by emergency vehicles;

11) The parking and circulation plan shall be referred to the Fire Official for comments regarding traffic safety and emergency access;

12) The applicant shall file a detailed statement of intent describing the proposed use of the building, in which the statement shall detail the proposed number and nature of the anticipated occupants;

13) Shall be in compliance with the Pennsylvania Department of Health, Department of Public Welfare, and Department of Mental Health standards applicable at the time of issue of license, and with the latest revision of licensing requirements. A license or certification shall be obtained from all appropriate governmental agencies prior to the issuance of an occupancy permit

14) A Certificate of Occupancy shall be required before any Unit may be occupied;

15) Any change in the conditions of original approval shall constitute a new use and the full procedure for obtaining approval of the conditional use shall be required.

16) All waste collection/storage areas shall be located at least fifty (50) feet from the nearest building and shall be enclosed by a solid masonry screen wall.

F. Athletic Facility

1) See: *"Day Spa," "Fitness Center," "Gymnasium," "Membership Club," "Recreational Facility," "Sports Facility."*
2) A traffic impact study shall be required;

3) Shall not be located on lots of less than 10,000 square feet;

4) Shall have yards of not less than twenty-five (25') feet;

5) Such recreational facility will be a benefit or convenience to the neighboring residents of the Municipality;

6) Such recreational facility will not cause any potentially detrimental effect on surrounding property values;

7) Such recreational facility will not cause any potential disruption or nuisance of or to adjacent lots or residences;

8) Any proposed recreational facility will not cause any detrimental effect to the public health, safety, morals, or general welfare of the Township residents; and
9) Any proposed recreational facility will not interfere or be inconsistent with the residential character of any Residential Districts or Residential Uses;

10) All mechanical equipment shall be screened from the view of adjoining properties;

11) All waste collection/storage areas shall be located at least fifty (50) feet from the nearest building and shall be enclosed by a solid masonry screen wall.

DRAFT

G. Banquet Hall

1) A traffic impact study shall be required;

2) Off-street parking requirements may be reduced upon satisfactory demonstration by the applicant that fewer than the number of parking spaces required by Table 902 will be required for the proposed community.

3) Building design and location shall permit ready accessibility by emergency vehicles;

4) All mechanical equipment shall be screened from the view of adjoining properties;

5) All waste collection/storage areas shall be located at least fifty (50) feet from the nearest building and shall be enclosed by a solid masonry screen wall;

6) Banquet halls, including all fixtures, tents and parking, shall be set back at least 50 feet from all property lines.

H. Billboard and/or Outdoor Advertising Sign

1) A billboard and/or outdoor advertising sign shall be deemed a principal structure and shall be located on its own individual lot and shall meet the minimum front, side and rear yard requirements applying to a principal use as set forth within that zoning district in which the billboard is to be located. Additionally, no billboard and/or outdoor advertising sign shall be erected within five hundred (500) feet of any residential or conservancy zoning district and shall not be within seven hundred and fifty (750) feet of the property line for any public or private school, park, library, church or other place of worship;

2) The maximum lot coverage as specified in Section §308 of the Zoning Ordinance shall apply to any lot upon which a billboard and/or outdoor advertising sign is located and shall be cumulative including any other structures and buildings on the same lot herewith;

3) A billboard and/or outdoor advertising sign shall be constructed with a light located at the top and directed downwards to the ground designed to place their light outlay only on the face of the billboard or outdoor advertising sign and shall not project past the sign onto adjoining properties or roadways. A photometric plan shall be required for review by the Municipality;

4) Any billboard and/or outdoor advertising sign using removable paper or other materials shall be maintained in such condition as to eliminate loose or frayed material protruding or hanging or falling from the structure;

5) Billboard and/or outdoor advertising signs shall be permitted as a conditional use in the C-2 Commercial Zoning District subject to the requirements in this section;

6) Location of Billboard and/or Outdoor Advertising Signs

a) A billboard and/or outdoor advertising sign shall not be erected within the following:

DRAFT

i. Within five hundred (500) feet of the boundary line of a residential or conservancy zoning district;

ii. Within seven hundred and fifty (750) feet of the boundary line any public or private school property, park, library or place of worship; and

iii. Within (100) feet of a public right of way.

b) The minimum front, side and rear yard requirements applying to a principal use as set forth within the zoning district in which the billboard and/or outdoor advertising sign is to be located shall apply to each billboard and/or outdoor advertising sign;

c) No billboard and/or outdoor advertising sign shall be erected in such a manner as to block the view from the road, street or driveway or of any existing sign, residential or non-residential structure, or limit or reduce the limit and ventilation requirements under the Pennsylvania Uniform Construction Code (PA UCC);

d) No billboard and/or outdoor advertising sign shall be constructed within the clear sight triangle of a public street, road or roadway on which it is situated and shall not in any case obstruct or impede traffic safety;

e) A billboard and/or outdoor advertising sign shall maintain a lateral minimum spacing of seven hundred and fifty (750) feet between it and another billboard and or outdoor advertising sign. The required spacing shall be measured from a point perpendicular to the center most point of the billboard and/or outdoor advertising sign to the front line, parallel to the property line, or center line of the roadway which the billboard and/or outdoor advertising sign is oriented; and

f) No billboard and/or outdoor advertising sign shall be mounted or painted on a roof, wall or other part of a building or structure.

7) Size and Height of Billboard and/or Outdoor Advertising Signs

a) A billboard and/or outdoor advertising sign shall have a maximum allowable gross surface area of one hundred and fifty (150) square feet per sign face;

b) The billboard and/or outdoor advertising sign and/or sign faces may be placed back-to-back or in a V-shaped configuration (having an interior angle of 90° or less) on a single pole;

c) A billboard and/or outdoor advertising sign may have a maximum of two (2) sign faces per structure. However, the gross surface area of each sign face shall not exceed 150 square feet;

d) The billboard and/or outdoor advertising sign's maximum dimension shall not exceed ten (10) feet in height and fifteen (15) feet in width. Said total height and total length will be measured from the outside dimensions of the billboard and/or outdoor advertising sign; and

DRAFT

e) A billboard and/or outdoor advertising sign shall have a maximum height above the roadway from which they are intended to be viewed of twenty-four (24) feet as measured from the top of the curb closest to the street to which it faces. However, the height of a billboard shall be measured from the grade around its foundation to the top of the structure.

8) Construction Standards of Billboard and/or Outdoor Advertising Signs

a) Billboard and/or outdoor advertising signs shall be constructed in accordance with applicable provisions of the currently adopted Pennsylvania Uniform Construction Code and amendments and shall be designed by a qualified engineer licensed in the Commonwealth of Pennsylvania. Plans shall include the submission of calculations on the structure and foundation;

b) Any billboard and/or outdoor advertising sign structure shall have a maximum of one (1) vertical support which shall be a maximum of three (3) feet in diameter, or width, and without bracing or vertical support;

c) A billboard and/or outdoor advertising sign structure face shall be independently supported and have vertical supports of metal which are galvanized or otherwise treated to prevent rust and corrosion;

d) The one (1) vertical support shall be capable of enabling the entire sign face to be able to withstand a minimum of one hundred (100) miles per hour wind load;

e) The base shall be installed using a foundation and footing designed and certified by a qualified engineer licensed in the Commonwealth of Pennsylvania and shall be submitted to the Municipality with the application for conditional use;

f) A billboard and/or outdoor advertising sign shall be permanently landscaped around its foundation with year-round shrubbery of minimum height of three (3) feet placed in such a manner as to screen the foundation of the structure. Evergreen trees of a minimum height of five (5) feet shall be placed at the side and rear perimeter;

g) Permanent landscaping shall form a solid barrier and/or backdrop to the billboard and/or outdoor advertising sign when practical in the opinion of the Zoning Officer;

h) Landscaping shall be maintained by the sign owner in an attractive and healthy manner in accordance with accepted conservation practices and Municipal Ordinances;

i) All curbs and grading shall be in accordance all Municipal Codes and Ordinances;

j) No bare cuts are permitted on a hillside;

k) All cuts and fills shall be permanently seeded or planted and maintained in accordance with Municipal Codes and Ordinances;

DRAFT

l) Any billboard and/or outdoor advertising sign with display lighting shall comply with §815.F, Lighting and Glare. A photometric plan shall be submitted for review for compliance;

m) No billboard and/or outdoor advertising sign, sign face or display lighting shall move, flash or emit noise. No display lighting shall cause distraction, confusion, nuisance or hazard to traffic, aircraft or other properties;

n) The use of colored lighting is not permitted;

o) A building permit and certified electrical inspection are required; and

p) Display lighting shall not operate between 12:00 midnight and 6:00 a.m. prevailing local time.

9) Maintenance of Billboard and/or Outdoor Advertising Signs

a) Any billboard and/or outdoor advertising sign shall be constructed with non-combustible material and maintained in a good condition;

b) Any billboard and/or outdoor advertising sign shall be entirely painted every three (3) years;

c) Any non-functioning bulb, pixel, or component shall be promptly replaced.

d) Every ten (10) years, the owner of the billboard and/or outdoor advertising sign shall have a structural inspection of the structure by a qualified professional engineer licensed by the Commonwealth of Pennsylvania. The professional engineer shall provide to the Municipality a certificate certifying that the billboard and/or outdoor advertising sign is structurally sound; and

e) Annual inspections of the billboard and/or outdoor advertising sign shall be conducted by the Municipality to determine compliance with provisions of this Article. Any sign found to be in an unsafe condition upon inspection by the Zoning Officer, or his/her designee, shall be declared to be a public nuisance and a notice shall be given to the owner, in writing to repair or remove the sign within in thirty (30) days after receiving written notice from the Zoning Officer. Upon failure of the owner to comply, the Municipality shall remove the sign at the owner's expense and a lien shall be placed on the property.

10) Permit required for Billboard and/or Outdoor Advertising Signs

a) Prior to submission of an application for a building permit, the applicant shall receive conditional use approval from Municipal Council and shall comply with all conditions of said approval.

b) The applicant shall also receive approval from all appropriate governmental agencies prior to the submission of a building permit application. A building permit application shall be accompanied by an application fee in the amount equal to that set by resolution by the Municipality.

DRAFT

11) Nonconforming billboard and/or outdoor advertising sign. Any billboard and/or outdoor advertising sign which does not conform to the requirements of this section shall not be enlarged or moved unless the billboard and/or outdoor advertising sign complies with all provisions of this ordinance. Any billboard and/or outdoor advertising sign which is damaged or destroyed by more than 51% of its replacement value at the time of damage or destruction shall be reconstructed only in compliance with all provisions of this section;

12) Electronic billboard and/or outdoor advertising sign. No existing billboard and/or outdoor advertising sign may be converted to or replaced with an electronic sign face, nor shall any new billboard and/or outdoor advertising sign be constructed with an electronic sign face, unless it meets the size, dimension, location, construction, maintenance and all other provisions of this ordinance relating to and required for new billboard and/or outdoor advertising signs herein, and, provided:

    a) The display, message or text of the electronic Billboard and/or Outdoor Advertising Sign does not change more than once every 30 seconds;

    b) The electronic Billboard and/or Outdoor Advertising Sign does not have more than two faces. In the event an electronic Billboard and/or Outdoor Advertising Sign contains two faces, each face of the sign shall be synchronized with the other so that any copy or display changes at the same time on both faces/sides;

    c) The square footage complies with the square footage required for standard Billboard and/or Outdoor Advertising Signs as determined by its gross surface area. The gross surface area of signs having two faces or display areas (i.e., signs having two sides or arranged at angles so they may be seen from opposing directions) shall be determined by adding all display areas together. The display area shall be equal on each side. Any electronic Billboard and/or Outdoor Advertising Sign arranged at an angle shall have an acute angle of not more than 30° between faces at any point;

    d) The copy on the electronic Billboard and/or Outdoor Advertising Sign is controlled or controllable from a fixed location within the Municipality;

    e) The electronic Billboard and/or Outdoor Advertising Sign does not have a display or copy which streams, rolls, pulsates, waves, flashes or contains any type of animation, movement, spinning, oscillation, scrolling or "ticker-tape" effect, background movement or any other form of motion of any other nature or kind, other than that necessary to change the fixed display or copy. In addition, the copy on any electronic sign shall not change by any form of "side-to-side," top-to-bottom" or "bottom to top" movement;

    f) The electronic Billboard and/or Outdoor Advertising Sign is constructed and maintained on a property where no other Billboard and/or Outdoor Advertising Sign exists. An electronic Billboard and/or Outdoor Advertising Sign may be substituted for an existing Billboard and/or Outdoor Advertising Sign only if all existing Billboard and/or Outdoor Advertising Signs on the property are removed in their entirety. Electronic Billboard and/or Outdoor Advertising Signs may not be coordinated with fixed copy Billboard and/or Outdoor Advertising Signs;

DRAFT

g) No other electronic Billboard and/or Outdoor Advertising Signs or electronic signs exist within 750 lineal feet in any direction from the proposed Billboard and/or Outdoor Advertising Sign;

h) The Billboard and/or Outdoor Advertising Sign has an automatic dimming device and is appropriately dimmed during evening hours; and

i) Any new Billboard and/or Outdoor Advertising Sign must obtain the same conditional use approval as a standard Billboard and/or Outdoor Advertising Sign pursuant to the terms of this Ordinance.

13) Revocation of Permits: In the event the Zoning Officer shall determine that a Billboard and/or Outdoor Advertising Sign was erected in violation of any provision set forth in the permit issued for that sign or if the Zoning Officer shall determine that a Billboard and/or Outdoor Advertising Sign is in a state of disrepair or dangerous condition, then the following procedures for permit revocation shall apply:

a) A notice of violation shall be issued to the owner of the property upon which the Billboard and/or Outdoor Advertising Sign is located and, if known, to the actual owner of the Billboard and/or Outdoor Advertising Sign specifically identifying the violation and establishing a term of not more than 30 days for the violation to be remedied;

b) If the owner does not take remedial action within the time period specified in the notice of violation, then the permit shall be revoked by the determination of the Zoning Officer and the Billboard and/or Outdoor Advertising Sign shall be removed;

c) The owner may appeal the notice of violation by filing a request for hearing by Municipal Council within the time specified for remedial action and by payment of an application fee equal to the amount then being assessed by the Municipality for conditional use applications;

d) In the event of an appeal, Council shall advertise and hold a hearing under the guidelines set forth for conditional use applications and thereafter issue a written decision; and

e) If the owner fails to take the required remedial action or to file an appeal as permitted herein, the Municipality may pursue any and all enforcement options available under this ordinance, at law or in equity.

I. Brewery

1) A traffic impact study shall be required;

2) A Brewpub or a Brewery must provide that all shipping traffic must have adequate access to an arterial or collector street and cannot be required to travel through a residential neighborhood on local streets;

3) Brewpubs must maintain at least fifteen percent (15%) of the gross floor area or five hundred (500) square feet of floor space, whichever is greater, for public use as a tavern and/or restaurant use;

DRAFT

4) Brewpubs may not exceed four thousand (4,000) square feet of gross floor area;

5) Brewpubs may not exceed an annual production of fifteen thousand (15,000) barrels, all beverages totaled. Brewpubs are required to be able to demonstrate, upon request of the Zoning Officer, that they have not exceeded the fifteen thousand (15,000) barrel annual limit in any twelve (12) month period;

6) All mechanical equipment shall be screened from the view of adjoining properties;

7) All waste collection/storage areas shall be located at least fifty (50) feet from the nearest building and shall be enclosed by a solid masonry screen wall.

8) Outdoor speakers shall be permitted for emergency announcements and crowd control only. Events may not be broadcast to the exterior of the building;

9) Breweries may not exceed fifteen thousand (15,000) square feet in gross floor area; and

10) All truck parking and loading docks or areas must be screened with landscaping.

J. Casino

1) A traffic impact study shall be required;

2) The owner/operator of the facility shall incorporate all stormwater management design standards as required pursuant to the Municipality of Monroeville Storm Water Management Ordinance 2700;

3) The owner/operator must comply with Table 902, Off Street Parking Requirements;

4) The owner/operator must comply with all governmental agencies, laws and regulations;

5) The site shall have frontage on and direct vehicular access to a public road;

6) Ingress, egress, and internal traffic circulation shall be designed to minimize congestion during peak usage of the facility;

7) A landscaped strip shall screen all property lines, which adjoin residential uses or residential zoning districts, at least fifty (50) feet in depth, which shall be comprised of a combination of high level and low-level plantings. Such screening shall be a minimum of six (6) feet in height for high level and two (2) feet in height for low level plants at the time of installation. Existing vegetation shall be used to meet these criteria at the discretion of the Municipality;

8) The private living areas and associated open spaces of all adjacent residential properties shall be effectively screened as per §808;

9) No direct beams or rays of light from exterior lighting fixtures, signs or vehicles maneuvering on the development site, shall be permitted to shine into the private living areas and associated open spaces of adjacent residential properties;

DRAFT

10) Location of buildings and structures, traffic circulation, and parking lots shall be designed to provide adequate access for emergency medical vehicles and firefighting equipment;

11) Access for the site shall be provided from nonresidential streets;

12) All mechanical equipment shall be screened from the view of adjoining properties;

13) Shall be located on lots with a minimum of five (5) acres in size; shall have side and rear yards of not less than twenty (20) feet when abutting non-residential zoning districts, and fifty (50) feet when abutting any R or S zoning district;

14) All waste collection/storage areas shall be located at least fifty (50) feet from the nearest building and shall be enclosed by a solid masonry screen wall;

15) Casinos shall not utilize outdoor speakers or generate noise in excess of the limits otherwise permitted by this ordinance;

16) Outdoor speakers shall be permitted for emergency announcements and crowd control only. Events may not be broadcast to the exterior of the building;

17) A Casino shall not create an enticement for minors because of its proximity to nearby uses where minors may congregate, including but not limited to schools, churches, or libraries;

K. Cemetery

1) Also see: *"Funeral Home";*

2) Minimum lot area - five (5) acres. Any building or area used for storage of equipment shall be setback a minimum of 50 feet from any lot in a residential district;

3) No grave sites shall be placed within 20 feet of any lot line or within 20 feet of a street right-of-way or an interior driveway through the cemetery;

4) No gravesite shall be placed where wetlands exist or are suspected;

5) No crematoriums shall be operated within 1,000 feet of a residential dwelling;

6) Expansion and / or establishment of cemeteries must be in conjunction with and adjacent to existing cemeteries or religious facilities;

7) Adequately funded programs and provisions which meet the approval of the Municipal Solicitor shall be provided to guarantee perpetual care of all cemetery grounds. This provision shall apply to existing cemeteries for which expansions are proposed;

8) No loading or unloading shall be permitted on public right-of-way;

9) No parking or standing of motor vehicles shall occur on adjoining streets other than passenger automobiles when funeral processions are being organized;

DRAFT

10) All mechanical equipment shall be screened from the view of adjoining properties;

11) All waste collection/storage areas shall be located at least fifty (50) feet from the nearest building and shall be enclosed by a solid masonry screen wall.

12) All garages, equipment shelters, offices and similar structures shall be screened from adjacent streets and residential properties by appropriate planting or fences approved by Council on the basis of design, aesthetic quality and general adequacy; and

13) All equipment shall be properly stored when not in use.

L. Child Care Center (Principal Use)

1) Child Care Center as an Accessory Use to a residential use requires a Use Variance or Special Exception;

2) A day care center or pre-school facility, if sited on the premises of an operating community service facility or religious institution shall be considered accessory to the principal use of the property concerned;

3) A traffic impact study shall be required;

4) Shall not be located on lots of less than 8,000 square feet;

5) Ingress, egress, and internal traffic circulation shall be designed to minimize congestion during peak usage of the facility;

6) A minimum of one on-site parking space shall be provided for each 300 square feet of floor area dedicated to child care;

7) Proof of a valid license to operate child care facilities issued by the Pennsylvania Department of Public Welfare shall be provided to the Municipality prior to the issuance of an occupancy permit by the Municipality for the use;

8) Activities shall be limited to functions normally associated with part-time tending of children and shall not include overnight or drop-in care;

9) All mechanical equipment shall be screened from the view of adjoining properties;

10) All waste collection/storage areas shall be located at least fifty (50) feet from the nearest building and shall be enclosed by a solid masonry screen wall.

11) Exterior open space shall be provided (suitable to the age groups being served), being usable and accessible only for the children pursuant to regulations issued by the Pennsylvania Department of Public Welfare. In addition, the outdoor play area shall meet the following requirements:

a) The recreation or outdoor play area shall be no closer than thirty (30) feet to an abutting private/public street or property line;

DRAFT

b) The outdoor play space shall be completely enclosed by a safe and adequate fence or wall a minimum of four (4) feet in height with a self-latching gate;

c) Any outdoor play area potentially susceptible to encountering vehicles leaving the roadway, travel lanes, or access ways shall be protected by a barrier capable of preventing the vehicle from entering the play area;

d) Outdoor play shall be limited to the hours between dawn and dusk, prevailing local time;

e) A visual buffer yard shall be installed between the child care facility and other nonresidential uses;

f) No permanently installed play equipment shall be located in any front yard; and

g) The outdoor play areas must meet all applicable requirements of the Americans with Disabilities Act.

12) Safe vehicular access and areas for discharging and picking up children shall be provided in the following manner:

a) Minimum dimensions of discharge and pick-up areas shall measure ten (10) feet in width and fifty (50) feet in length;

b) Discharge and pick-up areas shall be so located and designed so that the vehicles intended to use them can maneuver safely and conveniently to and from a public right-of-way and complete the discharge and pick-up without obstructing or interfering with the use of any public right-of-way, any parking space, or parking lot aisle; and

c) No area allocated as a discharge and pick-up area may be used to satisfy the area requirements for off-street parking, nor shall any portion of any off-street parking area be used to satisfy the area requirements for discharge and pick-up areas. All off-street discharge and pick-up areas shall be separated from walkways, sidewalks, parking lot aisles, streets, and alleys by curbing or other protective devices as approved by the Municipality.

13) Child Care Centers shall be located a minimum of two thousand (2000) feet apart from each other; and

14) Child Care Centers shall be located a minimum of two thousand (2000) feet from any existing Sexually Oriented Business.

M. Cigar Bar (also include some of the items from Marijuana Dispensary)

1) No person shall conduct, engage in, or operate in any manner a cigar bar within the Municipality without having first obtained a business license from the Monroeville Tax Office.

2) The business license, as provided for in this article, shall be prominently displayed on the premises of the cigar bar

DRAFT

3) Any license issued pursuant to this section is non-transferable to another person, entity, location or premises a cigar bar

4) The location of the cigar bar shall meet the requirements of Zoning Ordinance and Use Chart

5) Cigar bars shall comply with the requirements of the most currently adopted version of the International Building Code in regard to ventilation and exhaust

6) Complaints received by the Municipality from patrons or adjacent property owners shall require an inspection of the premises to verify that the mechanical code is being adhered to and has the correct exhaust, ventilation and filters standards are being followed

7) Failure to comply with these requirements may result in the issuance of citations

8) All mechanical equipment shall be screened from the view of adjoining properties;

9) All waste collection/storage areas shall be located at least fifty (50) feet from the nearest building and shall be enclosed by a solid masonry screen wall.

N. Commercial Communication Tower

1) Purposes and Findings of Fact

a) The purpose of this section is to establish uniform standards for the siting, design, permitting, maintenance, and use of Wireless Communications Facilities in Monroeville Municipality (referred to herein as the "Municipality"). While the Municipality recognizes the importance of Wireless Communications Facilities in providing high quality communications service to its residents and businesses, the Municipality also recognizes that it has an obligation to protect public safety and to minimize the adverse visual effects of such facilities through the standards set forth in the following provisions;

b) By enacting these provisions, the Municipality intends to:

i. Accommodate the need for Wireless Communications Facilities while regulating their location and number so as to ensure the provision of necessary services;

ii. Provide for the managed development of Wireless Communications Facilities in a manner that enhances the benefits of wireless communication and accommodates the needs of both Municipality residents and wireless carriers in accordance with federal and state laws and regulations;

iii. Establish procedures for the design, siting, construction, installation, maintenance and removal of both Commercial Communication Towers and Commercial Communication

DRAFT

Antennas in the Municipality, including facilities both inside and outside the public rights-of-way;

iv. Address new wireless technologies, including but not limited to, distributed antenna systems, data collection units, and other Wireless Communications Facilities;

v. Minimize the adverse visual effects and the number of such facilities through proper design, siting, screening, material, color and finish, and by requiring that competing providers of wireless communications services co-locate their Commercial Communication Antenna and related facilities on existing towers; and

vi. Promote the health, safety and welfare of the Municipality's residents.

2) General and Specific Requirements for Commercial Communication Antennas

a) The following regulations shall apply to all Commercial Communication Antennas:

i. Permitted by Conditional Use subject to regulations. Commercial Communication Antennas shall be located on municipally owned poles and traffic lights. If such placement is not possible, Commercial Communication Antennas are permitted by Conditional Use in all zones subject to the restrictions and conditions prescribed below and subject to applicable permitting by the Municipality;

ii. Nonconforming Wireless Support Structures. Commercial Communication Antennas shall be permitted to co-locate upon nonconforming Commercial Communication Towers and other nonconforming structures. Co-location of WCF upon existing Commercial Communication Towers is encouraged even if the Commercial Communication Towers is nonconforming as to use within a zoning district;

iii. Standard of care. Any Commercial Communication Antennas shall be designed, constructed, operated, maintained, repaired, modified and removed in strict compliance with all current applicable technical, safety and safety-related codes, including but not limited to the most recent editions of the American National Standards Institute (ANSI) Code, National Electrical Safety Code, and National Electrical Code. Any WCF shall at all times be kept and maintained in good condition, order and repair by qualified maintenance and construction personnel, so that the same shall not endanger the life of any person or any property in the Municipality;

iv. Wind. All Commercial Communication Antennas structures shall be designed to withstand the effects of wind gusts of at least 100 miles per hour in addition to the standard designed by the American National Standards Institute as prepared by the

DRAFT

engineering departments of the Electronics Industry Association, and Telecommunications Industry Association (ANSI/TIA-222, as amended);

v. A commercial communication tower shall be securely anchored in a fixed location on the ground. Plans submitted showing a cross section of the proposed structure, structural compliance with municipal codes documenting that the proposed structure meets or exceeds those standards, and documentary evidence from a professional engineer shall be provided, that the proposed structure will withstand wind, storm, ice, lightning and other natural forces. Additionally, documentation shall be provided by a professional engineer demonstrating that the commercial communication tower is structurally capable of handling antennas, dishes and other equipment mounted or attached to the commercial communication tower, and what the maximum load limits are for that structure;

vi. An environmental impact statement shall be submitted with any conditional use application describing the effects that the proposed commercial communication tower and related equipment will have on the environment and surrounding area, including, but not limited to effects on human health, scenic views, air traffic or other impacts as determined by the zoning officer;

vii. Aviation safety. Commercial Communication Antennas shall comply with all federal and state laws and regulations concerning aviation safety;

viii. Public safety communications. Commercial Communication Antennas shall not interfere with public safety communications or the reception of broadband, television, radio or other communication services enjoyed by occupants of nearby properties;

ix. Radio frequency emissions. A Commercial Communication Antennas shall not, by itself or in conjunction with other WCFs, generate radio frequency emissions in excess of the standards and regulations of the FCC, including but not limited to, the FCC Office of Engineering Technology Bulletin 65 entitled "Evaluating Compliance with FCC Guidelines for Human Exposure to Radio Frequency Electromagnetic Fields," as amended;

x. Removal. In the event that use of a Commercial Communication Antennas is discontinued, the owner shall provide written notice to the Municipality of its intent to discontinue use and the date when the use shall be discontinued. Unused or abandoned WCF or portions of WCF shall be removed as follows:

i.) All abandoned or unused WCFs and accessory facilities shall be removed within two (2) months of the cessation of operations at the site unless a time extension is approved by the Municipality;

DRAFT

ii.) If the WCF or accessory facility is not removed within two (2) months of the cessation of operations at a site, or within any longer period approved by the Municipality, the WCF and/or associated facilities and equipment may be removed by the Municipality and the cost of removal assessed against the owner of the WCF;

xi. Insurance. Each Person that owns or operates a Commercial Communication Antenna shall provide the Municipality with a certificate of insurance evidencing general liability coverage in the minimum amount of $1,000,000 per occurrence and property damage coverage in the minimum amount of $1,000,000 per occurrence covering the Commercial Communication Antenna;

xii. Indemnification. Each person that owns or operates a Commercial Communication Antenna shall, at its sole cost and expense, indemnify, defend and hold harmless the Municipality, its elected and appointed officials, employees and agents, at all times against any and all claims for personal injury, including death, and property damage arising in whole or in part from, caused by or connected with any act or omission of the person, its officers, agents, employees or contractors arising out of, but not limited to, the construction, installation, operation, maintenance or removal of the Commercial Communication Antenna. Each person that owns or operates a Commercial Communication Antenna shall defend any actions or proceedings against the Municipality in which it is claimed that personal injury, including death, or property damage was caused by the construction, installation, operation, maintenance or removal of a Commercial Communication Antenna. The obligation to indemnify, hold harmless and defend shall include, but not be limited to, the obligation to pay judgments, injuries, liabilities, damages, reasonable attorneys' fees, reasonable expert fees, court costs and all other costs of indemnification;

xiii. Maintenance. To the extent permitted by law, the following maintenance requirements shall apply:

i.) The Commercial Communication Antenna shall be fully automated and unattended on a daily basis and shall be visited only for maintenance or emergency repair;

ii.) Such maintenance shall be performed to ensure the upkeep of the facility in order to promote the safety and security of the Municipality's residents; and

iii.) All maintenance activities shall utilize nothing less than the best available technology for preventing failures and accidents;

b) The following regulations shall apply to all collocated Commercial Communication Antennas that do not Substantially Change the Physical Dimensions of the Wireless Support Structure to which they are

attached, or otherwise fall under the Pennsylvania Wireless Broadband Collocation Act:

i. Permit required. WCF Applicants proposing the modification of an existing Commercial Communication Tower shall obtain a building permit from the Municipality. In order to be considered for such permit, the WCF Applicant must submit a permit application to the Municipality in accordance with applicable permit policies and procedures;

ii. Timing of approval for applications that fall under the WBCA. Within thirty (30) calendar days of the date that an application for a Commercial Communication Antenna is filed with the Municipality, the Municipality shall notify the WCF Applicant in writing of any information that may be required to complete such application. Within sixty (60) calendar days of receipt of a complete application, the Municipality shall make its final decision on whether to approve the application and shall advise the WCF Applicant in writing of such decision. The Municipality shall notify the WCF Applicant as to completeness of the WCF Application within thirty (30) days of receipt; should these time parameters be removed or qualified for unseen delays??? as per ACED comment 27.b.

iii. Related Equipment. Ground-mounted Related Equipment greater than three (3) cubic feet shall not be located within fifty (50) feet of a lot in residential use or zoned residential; and

iv. Permit fees. The Municipality may assess appropriate and reasonable permit fees directly related to the Municipality's actual costs in reviewing and processing the application for approval of a Commercial Communication Antenna or $1,000, whichever is less.

c) The following regulations shall apply to all Commercial Communication Antennas that do Substantially Change the Wireless Support Structure to which they are attached, or that otherwise do not fall under the Pennsylvania Wireless Broadband Collocation Act:

i. Prohibited on Certain Structures. No Commercial Communication Antenna shall be located on single-family detached residences, single-family attached residences, or any residential accessory structure;

ii. Conditional Use Required. Any WCF Applicant proposing the construction of a new Commercial Communication Antenna, or the modification of an existing Commercial Communication Antenna, shall first obtain a Conditional Use from the Municipality. New constructions, modifications, and replacements that do fall under the WBCA shall be not be subject to the Conditional Use process. The Conditional Use application shall demonstrate that the proposed facility complies with all applicable provisions in the Monroeville Municipality Zoning Ordinance;

DRAFT

iii. Historic Buildings. No Commercial Communication Antenna may be located upon any property, or on a building or structure that is listed on either the National or Pennsylvania Registers of Historic Places, or is listed on the official historic structures and/or historic districts list maintained by the Municipality;

iv. Retention of Experts. The Municipality may hire any consultant(s) and/or expert(s) necessary to assist the Municipality in reviewing and evaluating the application for approval of the WCF and, once approved, in reviewing and evaluating any potential violations of the terms and conditions of these WCF provisions. The WCF Applicant and/or owner of the WCF shall reimburse the Municipality for all costs of the Municipality's consultant(s) in providing expert evaluation and consultation in connection with these activities;

v. Permit Fees. The Municipality may assess appropriate and reasonable permit fees directly related to the Municipality's actual costs in reviewing and processing the application for approval of a Commercial Communication Antenna, as well as related inspection, monitoring and related costs;

d) Development Regulations. Commercial Communication Antennas shall be co-located on existing Wireless Support Structures, such as existing buildings or Commercial Communication Towers, subject to the following conditions:

i. The total height of any Wireless Support Structure and mounted WCF shall not exceed twenty (20) feet above the maximum height permitted in the underlying zoning district, unless the WCF Applicant applies for, and subsequently obtains, a variance;

ii. In accordance with industry standards, all Commercial Communication Antenna Applicants must submit documentation to the Municipality justifying the total height of the Commercial Communication Antenna. Such documentation shall be analyzed in the context of such justification on an individual basis; and

iii. If the WCF Applicant proposes to locate the Related Equipment in a separate building, the building shall comply with the minimum requirements for the applicable zoning district, and landscaping shall be required to screen as much of the equipment building as possible. An evergreen screen shall surround the site. The evergreen screen shall be a minimum height of six (6) feet at planting.

vi. A security fence with a minimum height of ten (10) feet shall surround any separate communications equipment building. Vehicular access to the communications equipment building shall not interfere with the parking or vehicular circulations on the site for the principal use; and

DRAFT

vii. Non-commercial usage exemption. Municipal residents utilizing satellite dishes and antennae for the purpose of maintaining television, phone, and/or internet connections at their respective residences shall be exempt from the regulations enumerated in this section of the Zoning Ordinance.

e) Design Regulations. Commercial Communication Antennas shall employ Stealth Technology and be treated to match the Wireless Support Structure, in order to minimize aesthetic impact. The application of the Stealth Technology chosen by the WCF Applicant shall be subject to the approval of the Municipality;

f) Omnidirectional or whip communications antennas shall not exceed twenty (20) feet in height or seven (7) inches in diameter;

g) Directional or panel communications antennas shall not exceed eight (8) feet in height or three (3) feet in width;

h) Cylinder-type antennas shall not exceed ten (10) feet in length and not exceed twelve (12) inches in diameter and shall be of a color that is identical or similar to the color of the supporting structure to make the antenna and any related accessory equipment visually unobtrusive; and

i) Satellite and microwave dishes shall not exceed ten (10) feet in diameter. Dish antennas greater than three (3) feet in diameter shall be screened with an appropriate architectural treatment that is compatible with or integral to the architecture or building to which they are attached. This screening requirement shall not apply to dishes located upon towers.

j) Removal, Replacement and Modification

i. The removal and replacement of Commercial Communication Antennas and/or accessory equipment for the purpose of upgrading or repairing the WCF is permitted, so long as such repair or upgrade does not Substantially Change the overall size of the WCF or the numbers of antennae;

ii. Any material modification to a WCF shall require notice to be provided to the Municipality, and possible supplemental permit approval to the original permit or authorization.

k) Inspection. The Municipality reserves the right to inspect any WCF to ensure compliance with the provisions of the Zoning Ordinance and any other provisions found within the Municipality Code or state or federal law. The Municipality and/or its agents shall have the authority to enter the property upon which a WCF is located at any time, upon reasonable notice to the operator, to ensure such compliance.

l) Regulations Applicable to all Commercial Communication Antennas located in the Public Rights-of-Way.

DRAFT

m) In addition to the Commercial Communication Antenna provisions listed in Section 2, the following regulations shall apply to Commercial Communication Antennas located in the public rights-of-way:

i. Co-location. Commercial Communication Antennas in the ROW shall be co-located on existing poles, such as existing utility poles or light poles. If co-location is not technologically or economically feasible, the WCF Applicant shall locate its Commercial Communication Antenna on existing poles or freestanding structures that do not already act as Wireless Support Structures with the Municipality's approval;

ii. Design Requirements:

i.) WCF installations located above the surface grade in the public ROW including, but not limited to, those on streetlights and joint utility poles, shall consist of equipment components that are no more than six (6) feet in height and that are compatible in scale and proportion to the structures upon which they are mounted. All equipment shall be the smallest and least visibly intrusive equipment feasible; and

ii.) Antenna and Related Equipment shall be treated to match the supporting structure and may be required to be painted, or otherwise coated, to be visually compatible with the support structure upon which they are mounted.

iii. Time, Place and Manner. The Municipality shall determine the time, place and manner of construction, maintenance, repair and/or removal of all Commercial Communication Antennas in the ROW based on public safety, traffic management, physical burden on the ROW, and related considerations. For public utilities, the time, place and manner requirements shall be consistent with the police powers of the Municipality and the requirements of the Public Utility Code;

iv. Equipment Location. Commercial Communication Antennas and Related Equipment shall be located so as not to cause any physical or visual obstruction to pedestrian or vehicular traffic, or to otherwise create safety hazards to pedestrians and/or motorists or to otherwise inconvenience public use of the ROW as determined by the Municipality. In addition:

i.) In no case shall ground-mounted Related Equipment, walls, or landscaping be located within eighteen (18) inches of the face of the curb or within an easement extending onto a privately-owned lot;

ii.) Ground-mounted Related Equipment that cannot be placed underground shall be screened, to the fullest extent possible, through the use of landscaping or other decorative features to the satisfaction of the Municipality;

DRAFT

iii.) Required electrical meter cabinets shall the screened to blend in with the surrounding area to the satisfaction of the Municipality;

iv.) Any graffiti on any Wireless Support Structures or any Related Equipment shall be removed at the sole expense of the owner;

v.) Any proposed underground vault related to Commercial Communication Antennas shall be reviewed and approved by the Municipality;

v. Relocation or Removal of Facilities. Within two (2) months following written notice from the Municipality, or such longer period as the Municipality determines is reasonably necessary or such shorter period in the case of an emergency, an owner of a WCF in the ROW shall, at its own expense, temporarily or permanently remove, relocate, change or alter the position of any WCF when the Municipality, consistent with its police powers and applicable Public Utility Commission regulations, shall have determined that such removal, relocation, change or alteration is reasonably necessary under the following circumstances:

i.) The construction, repair, maintenance or installation of any Municipality or other public improvement in the right-of-way;

ii.) The operations of the Municipality or other governmental entity in the Right-of-Way;

iii.) Vacation of a street or road or the release of a utility easement; or

iv.) An Emergency as determined by the Municipality.

3) General and Specific Requirements for All Commercial Communication Towers

a) The following regulations shall apply to all Commercial Communication Towers, excluding any Commercial Communication Tower that is less than seventy (70) feet in height and owned and operated by a federally licensed amateur radio status operator:

i. Standard of Care. Any Commercial Communication Towers shall be designed, constructed, operated, maintained, repaired, modified and removed in strict compliance with all current applicable technical, safety and safety-related codes, including but not limited to, the most recent editions of the American National Standards Institute (ANSI) Code, National Electrical Safety Code, National Electrical Code, as well as the accepted and responsible workmanlike industry practices of the National Association of Tower Erectors. Any Commercial Communication Towers shall at all times be kept and maintained in good condition, order and repair by qualified maintenance and

DRAFT

construction personnel, so that the same shall not endanger the life of any person or any property in the Municipality;

ii. Notice. Upon submission of an application for a Commercial Communication Tower and the scheduling of the public hearing upon the application, the WCF Applicant shall mail notice to all owners of every property within five hundred (500) feet of the proposed facility. The WCF Applicant shall provide proof of the notification to the Municipality;

iii. Conditional Use Authorization Required. Commercial Communication Tower are permitted in C-2 Business Commercial, C-3 Commercial, L, Special Use, M-1 Industrial, and M-2 Planned Industrial, S Conservancy and LF Landfill Districts by Conditional Use and at a height necessary to satisfy their function in the WCF Applicant's wireless communications system. No WCF Applicant shall have the right under these regulations to erect a tower to the maximum height specified in this section unless it proves the necessity for such height. The WCF Applicant shall demonstrate that the antenna/tower/pole for the Commercial Communication Tower is the minimum height necessary for the service area;

iv. Prior to Council's approval of a Conditional Use authorizing the construction and installation of Commercial Communication Tower, it shall be incumbent upon the WCF Applicant for such Conditional Use approval to prove to the reasonable satisfaction of the Council that the WCF Applicant cannot adequately extend or infill its communications system by the use of equipment such as redoes, repeaters, antenna(s) and other similar equipment installed on existing structures, such as utility poles or their appurtenances and other available tall structures. The WCF Applicant shall further demonstrate that the proposed Commercial Communication Tower must be located where it is proposed in order to serve the WCF Applicant's service area and that no other viable alternative location exists;

v. The Conditional Use application shall be accompanied by a propagation study evidencing the need for the proposed tower or other communication facilities and equipment, a description of the type and manufacturer of the proposed transmission/radio equipment, the frequency range (megahertz band) assigned to the WCF Applicant, the power in watts at which the WCF Applicant transmits, and any relevant related tests conducted by the WCF Applicant in determining the need for the proposed site and installation;

vi. The Conditional Use application shall be accompanied by documentation demonstrating that the proposed Commercial Communication Tower complies with all state and federal laws and regulations concerning aviation safety;

vii. Where the Commercial Communication Tower is located on a property with another principal use, the WCF Applicant shall

DRAFT

present documentation to the Municipal Council that the owner of the property has granted an easement for the proposed WCF and that vehicular access will be provided to the facility;

viii. The Conditional Use application shall also be accompanied by documentation demonstrating that the proposed Commercial Communication Tower complies with all applicable provisions in this section;

ix. Engineer Inspection. Prior to the Municipality's issuance of a permit authorizing construction and erection of a Commercial Communication Tower, a structural engineer registered in Pennsylvania shall issue to the Municipality a written certification of the proposed WCF's ability to meet the structural standards offered by either the Electronic Industries Association or the Telecommunication Industry Association and certify the proper construction of the foundation and the erection of the structure. This certification shall be provided during the conditional hearings, or at a minimum, be made as a condition attached to any approval given such that the certification be provided prior to issuance of any building permits;

x. Visual Appearance and Land Use Compatibility. Commercial Communication Tower shall employ Stealth Technology which may include the tower portion to be painted silver or another color approved by the Municipal Council, or shall have a galvanized finish. All Commercial Communication Towers and Related Equipment shall be aesthetically and architecturally compatible with the surrounding environment and shall maximize the use of a like facade to blend with the existing surroundings and neighboring buildings to the greatest extent possible. The Municipal Council shall consider whether its decision upon the subject application will promote the harmonious and orderly development of the zoning district involved; encourage compatibility with the character and type of development existing in the area; benefit neighboring properties by preventing a negative impact on the aesthetic character of the community; preserve woodlands and trees existing at the site to the greatest possible extent; and encourage sound engineering and land development design and construction principles, practices and techniques;

xi. Co-location and siting. An application for a new Commercial Communication Tower shall demonstrate that the proposed Commercial Communication Tower cannot be accommodated on an existing or approved structure or building, or sited on land owned and maintained by the Municipality. The Municipal Council may deny an application to construct a new Commercial Communication Tower if the WCF Applicant has not made a good faith effort to mount the Commercial Communication antenna(s) on an existing structure. The WCF Applicant shall demonstrate that it contacted the owners of tall structures, buildings, and towers within a one quarter (¼) of a mile radius of the site proposed, sought permission to install an antenna on

DRAFT

those structures, buildings, and towers and was denied for one of the following reasons:

i.) The proposed antenna and Related Equipment would exceed the structural capacity of the existing building, structure or tower, and its reinforcement cannot be accomplished at a reasonable cost;

ii.) The proposed antenna and Related Equipment would cause radio frequency interference with other existing equipment for that existing building, structure, or tower and the interference cannot be prevented at a reasonable cost;

iii.) Such existing buildings, structures, or towers do not have adequate location, space, access, or height to accommodate the proposed equipment or to allow it to perform its intended function; and

iv.) A commercially reasonable agreement could not be reached with the owner of such building, structure, or tower.

xii. Permit Required for Modifications. To the extent permissible under applicable state and federal law, any WCF Applicant proposing the modification of an existing Commercial Communication Tower, which increases the overall height of such WCF, shall first obtain a building permit from the Municipality. Non-routine modifications shall be prohibited without such permit;

xiii. Gap in Coverage. A WCF Applicant for a Commercial Communication Tower must demonstrate that a significant gap in wireless coverage or capacity exists in the applicable area and that the type of WCF being proposed is the least intrusive means by which to fill that gap in wireless coverage. The existence or non-existence of a gap in wireless coverage shall be a factor in the Municipality's decision on an application for approval of Commercial Communication Tower;

xiv. Additional Antennae. As a condition of approval for all Commercial Communication Tower, the WCF Applicant shall provide the Municipality with a written commitment that it will allow other service providers to co-locate antennae on Commercial Communication Towers where technically and economically feasible. The owner of a Commercial Communication Tower shall not install any additional antennae without obtaining the prior written approval of the Municipality;

xv. Wind. Any Commercial Communication Tower structures shall be designed to withstand the effects of wind gusts of at least 100 miles per hour in addition to the standard designed by the American National Standards Institute as prepared by the engineering departments of the Electronics Industry Association,

and Telecommunications Industry Association (ANSI/EIA/TIA-222), as amended;

xvi. Height. Any Commercial Communication Tower shall be designed at the minimum functional height. In all Zoning Districts the maximum height of any new Commercial Communication Tower shall be two hundred (200) feet. An existing tower may be modified or extended to a height not to exceed a total height of two hundred fifteen (215) feet, to accommodate the collocation of additional communications antennas;

xvii. Related Equipment. Either a one single-story wireless communications equipment building not exceeding 500 square feet in area, or up to five metal boxes placed on a concrete pad not exceeding 10 feet by 20 feet in area housing the receiving and transmitting equipment, may be located on the site for each unrelated company sharing Commercial Communication Antenna space on the Commercial Communication Tower;

xviii. Public Safety Communications. No Commercial Communication Tower shall interfere with public safety communications or the reception of broadband, television, radio or other communication services enjoyed by occupants of nearby properties;

xix. Maintenance. The following maintenance requirements shall apply:

i.) Any Commercial Communication Tower shall be fully automated and unattended on a daily basis and shall be visited only for maintenance or emergency repair;

ii.) Such maintenance shall be performed to ensure the upkeep of the WCF in order to promote the safety and security of the Municipality's residents, and utilize the best available technology for preventing failures and accidents.

xx. Radio Frequency Emissions. A Commercial Communication Tower shall not, by itself or in conjunction with other WCFs, generate radio frequency emissions in excess of the standards and regulations of the FCC, including but not limited to, the FCC Office of Engineering Technology Bulletin 65 entitled "Evaluating Compliance with FCC Guidelines for Human Exposure to Radio Frequency Electromagnetic Fields," as amended;

xxi. Historic Buildings or Districts. A Commercial Communication Tower shall not be located upon a property, and/or on a building or structure that is listed on either the National or Pennsylvania Registers of Historic Places, or eligible to be so listed, or is included in the official historic structures and/or historic districts list maintained by the Municipality;

xxii. Signs. All Commercial Communication Towers shall post a sign in a readily visible location identifying the name and phone

DRAFT

number of a party to contact in the event of an emergency. The only other signage permitted on the WCF shall be those required by the FCC, or any other federal or state agency;

xxiii. Lighting. No Commercial Communication Tower shall be artificially lighted, except as required by law. If lighting is required, the WCF Applicant shall provide a detailed plan for sufficient lighting, demonstrating as unobtrusive and inoffensive an effect as is permissible under state and federal regulations. The WCF Applicant shall promptly report any outage or malfunction of FAA-mandated lighting to the appropriate governmental authorities and to the Municipality Manager;

xxiv. Noise. Commercial Communication Towers shall be operated and maintained so as not to produce noise in excess of applicable noise standards under state law and the Municipality Code, except in emergency situations requiring the use of a backup generator, where such noise standards may be exceeded on a temporary basis only;

xxv. Aviation Safety. Commercial Communication Towers shall comply with all federal and state laws and regulations concerning aviation safety;

xxvi. Retention of Experts. The Municipality may hire any consultant and/or expert necessary to assist the Municipality in reviewing and evaluating the application for approval of the Commercial Communication Tower and, once approved, in reviewing and evaluating any potential violations of the terms and conditions of these provisions. The WCF Applicant and/or owner of the WCF shall reimburse the Municipality for all costs of the Municipality's consultant(s) in providing expert evaluation and consultation in connection with these activities;

xxvii. Timing of Approval. Within thirty (30) calendar days of the date that an application for a Commercial Communication Tower is filed with the Municipality, the Municipality shall notify the WCF Applicant in writing of any information that may be required to complete such application. All applications for Commercial Communication Towers shall be acted upon within one hundred fifty (150) days of the receipt of a fully completed application for the approval of such Commercial Communication Towers and the Municipality shall advise the WCF Applicant in writing of its decision. If additional information was requested by the Municipality to complete an application, the time required by the WCF Applicant to provide the information shall not be counted toward the one hundred fifty (150) day review period;

xxviii. *Nonconforming use*s. Nonconforming Commercial Communication Towers which are hereafter damaged or destroyed due to any reason or cause may be repaired and restored at their former location, but must otherwise comply with the terms and conditions of this section;

DRAFT

xxix. Removal. In the event that use of a Commercial Communication Tower is planned to be discontinued, the owner shall provide written notice to the Municipality of its intent to discontinue use and the date when the use shall be discontinued. Unused or abandoned WCF or portions of WCF shall be removed as follows:

i.) All unused or abandoned Commercial Communication Towers and accessory facilities shall be removed within six (6) months of the cessation of operations at the site unless a time extension is approved by the Municipality;

ii.) If the WCF and/or accessory facility is not removed within six (6) months of the cessation of operations at a site, or within any longer period approved by the Municipality, the WCF and accessory facilities and equipment may be removed by the Municipality and the cost of removal assessed against the owner of the WCF; and

iii.) Any unused portions of Commercial Communication Towers, including antennae, shall be removed within six (6) months of the time of cessation of operations. The Municipality must approve all replacements of portions of a Commercial Communication Tower previously removed;

xxx. Permit Fees. The Municipality may assess appropriate and reasonable permit fees directly related to the Municipality's actual costs in reviewing and processing the application for approval of a Commercial Communication Tower, as well as related inspection, monitoring, and related costs;

xxxi. FCC License. Each person that owns or operates a Commercial Communication Tower over forty (40) feet in height shall submit a copy of its current FCC license, including the name, address, and emergency telephone number for the operator of the facility;

xxxii. Insurance. Each person that owns or operates a Commercial Communication Tower greater than forty (40) feet in height shall provide the Municipality with a certificate of insurance evidencing general liability coverage in the minimum amount of $5,000,000 per occurrence and property damage coverage in the minimum amount of $5,000,000 per occurrence covering the Commercial Communication Tower. Each Person that owns or operates a Commercial Communication Tower forty (40) feet or less in height shall provide the Municipality with a certificate of insurance evidencing general liability coverage in the minimum amount of $1,000,000 per occurrence and property damage coverage in the minimum amount of $1,000,000 per occurrence covering each Commercial Communication Tower;

xxxiii. Indemnification. Each person that owns or operates a Commercial Communication Tower shall, at its sole cost and expense, indemnify, defend and hold harmless the Municipality, its elected

and appointed officials, employees and agents, at all times against any and all claims for personal injury, including death, and property damage arising in whole or in part from, caused by or connected with any act or omission of the person, its officers, agents, employees or contractors arising out of, but not limited to, the construction, installation, operation, maintenance or removal of the Commercial Communication Tower. Each person that owns or operates a Commercial Communication Tower shall defend any actions or proceedings against the Municipality in which it is claimed that personal injury, including death, or property damage was caused by the construction, installation, operation, maintenance or removal of Commercial Communication Tower. The obligation to indemnify, hold harmless and defend shall include, but not be limited to, the obligation to pay judgments, injuries, liabilities, damages, reasonable attorneys' fees, reasonable expert fees, court costs and all other costs of indemnification;

xxxiv. Engineer signature. All plans and drawings for a Commercial Communication Tower shall contain a seal and signature of a professional structural engineer, licensed in the Commonwealth of Pennsylvania; and

xxxv. Financial security. Prior to receipt of a zoning permit for the construction or placement of a Commercial Communication Tower, the WCF Applicant shall provide to the Municipality financial security sufficient to guarantee the removal of the Commercial Communication Tower. Said financial security shall remain in place until the Commercial Communication Tower is removed.

4) The following regulations shall apply to Commercial Communication Towers located outside the Public Rights-of-Way:

1) Development Regulations

i. Commercial Communication Tower shall not be located in, or within seventy-five (75) feet of, an area in which utilities are primarily located underground;

ii. Commercial Communication Towers are permitted by Conditional Use, outside the public Rights-of-Way, in the following zoning districts:

i.) C-2 Business Commercial

ii.) C-3 Commercial

iii.) L Special Use

iv.) M-1 Industrial

v.) M-2 Planned Industrial

DRAFT

vi.) S Conservancy

vii.) LF Landfill

iii. Sole use on a lot. A Commercial Communication Tower shall be permitted as a sole use on a lot, provided that the underlying lot meets the minimum size specifications set forth in the Municipality Zoning Code;

iv. Combined with another use. A Commercial Communication Tower may be permitted on a property with an existing use, or on a vacant parcel in combination with another use, except residential, subject to the following conditions:

i.) The existing use on the property may be any permitted use in the applicable district, and need not be affiliated with the WCF;

ii.) Minimum lot area: The minimum lot shall comply with the requirements for the applicable district and shall be the area needed to accommodate the Commercial Communication Tower and guy wires, the equipment building, security fence, and buffer planting if the proposed WCF is greater than forty (40) feet in height;

iii.) Minimum setbacks: The minimum distance between the base of a Commercial Communication Tower and any adjoining property line or street right-of-way line shall be equal to 100% of the height of the Commercial Communication Tower or the minimum front yard setback of the underlying zoning district, whichever is greatest. Where the site on which a Commercial Communication Tower is proposed to be located is contiguous to an educational use, child day-care facility, or agriculture or residential use, the minimum distance between the base of a Commercial Communication Tower and any such adjoining uses shall equal two hundred fifty (250) feet, regardless of the height of the Commercial Communication Tower, unless it is demonstrated to the reasonable satisfaction of the Council that in the event of failure the WCF is designed to collapse upon itself within a setback area less than the required minimum setback without endangering such adjoining uses and their occupants.

5) Design Regulations

a) The WCF shall employ the most current Stealth Technology available in an effort to appropriately blend into the surrounding environment and minimize aesthetic impact. Application of the Stealth Technology chosen by the WCF Applicant shall be subject to the approval of the Municipality;

DRAFT

b) To the extent permissible by law, any height extensions to an existing Commercial Communication Tower shall require prior approval of the Municipality;

c) Any proposed Commercial Communication Tower shall be designed structurally, electrically, and in all respects to accommodate both the WCF Applicant's antennae and comparable antennae for future users; and

d) Any Commercial Communication Tower over forty (40) feet in height shall be equipped with an anti-climbing device, as approved by the manufacturer.

6) Surrounding Environs

a) The WCF Applicant shall ensure that the existing vegetation, trees and shrubs located within proximity to the WCF structure shall be preserved to the maximum extent possible;

b) The WCF Applicant shall submit a soil report to the Municipality complying with the standards of Appendix I: Geotechnical Investigations, ANSI/EIA-222, as amended, to document and verify the design specifications of the foundation of the Commercial Communication Tower, and anchors for guy wires, if used.

7) Fence/Screen

a) A *commercial communication tower* and all equipment (including guy wires) shall be enclosed by a chain link fence ten (10) feet high with three (3) strands of anti-climbing devices on the top of the chain link fence. The *commercial communication tower* shall be shielded or guarded against climbing of unauthorized personnel. Access to the *site* shall be restricted and remained locked. Participation in the Monroeville Municipal Fire Department Knox lock program is required to assure access to fire and emergency personnel. Any *structures* related to the *commercial communication tower* shall be equipped with a twenty-four (24)-hour security system;

b) Landscaping shall be required to screen as much of a newly constructed Commercial Communication Tower as possible. The Municipal Council may permit any combination of existing vegetation, topography, walls, decorative fences or other features instead of landscaping, if, in the discretion of the Council, they achieve the same degree of screening. Existing vegetation shall be preserved to the maximum extent possible.

i. An evergreen screen shall be required to surround the site. The evergreen screen shall be a minimum height of six (6) feet at planting.

8) Accessory Equipment:

a) Ground-mounted Related Equipment associated to, or connected with, a Commercial Communication Tower shall be placed underground or

DRAFT

screened from public view using Stealth Technologies, as described above; and

b) All Related Equipment, utility buildings and accessory structures shall be architecturally designed to blend into the environment in which they are situated and shall meet the minimum setback requirements of the underlying zoning district.

9) Access Road: An access road, turnaround space and parking shall be provided to ensure adequate emergency and service access to Commercial Communication Tower. The access road shall be a dust-free all-weather surface for its entire length. Maximum use of existing roads, whether public or private, shall be made to the extent practicable. Road grades shall closely follow natural contours to assure minimal visual disturbance and minimize soil erosion. Where applicable, the WCF owner shall present documentation to the Municipality that the property owner has granted an easement for the proposed facility;

10) Parking: For each Commercial Communication Tower greater than forty (40) feet in height, there shall be two off-street parking spaces;

11) Inspection: The Municipality reserves the right to inspect any Commercial Communication Tower to ensure compliance with the Zoning Ordinance and any other provisions found within the Municipality Code or state or federal law. The Municipality and/or its agents shall have the authority to enter the property upon which a WCF is located at any time, upon reasonable notice to the operator, to ensure such compliance.

a) The following regulations shall apply to Commercial Communication Towers located in the Public Rights-of-Way:

i. Location and development standards:

i.) Commercial Communication Tower in the ROW shall not exceed forty (40) feet in height and are prohibited in areas in which all utilities are located underground;

ii.) Commercial Communication Tower shall not be located in the front façade area of any structure; and

iii.) Commercial Communication Tower shall be permitted along certain collector roads and arterial roads throughout the Municipality, regardless of the underlying zoning district. A listing of such roads is adopted via Resolution of Municipal Council on an annual basis.

ii. Time, Place and Manner: The Municipality shall determine the time, place and manner of construction, maintenance, repair and/or removal of all Commercial Communication Tower in the ROW based on public safety, traffic management, physical burden on the ROW, and related considerations. For public utilities, the time, place and manner requirements shall be consistent with the police powers of the Municipality and the requirements of the Public Utility Code;

DRAFT

iii. Equipment Location: Commercial Communication Tower and Related Equipment shall be located so as not to cause any physical or visual obstruction to pedestrian or vehicular traffic, or to otherwise create safety hazards to pedestrians and/or motorists or to otherwise inconvenience public use of the ROW as determined by the Municipality. In addition:

i.) In no case shall ground-mounted Related Equipment, walls, or landscaping be located within 18 inches of the face of the curb;

ii.) Ground-mounted Related Equipment that cannot be placed underground shall be screened, to the fullest extent possible, through the use of landscaping or other decorative features to the satisfaction of the Municipality;

iii.) Required electrical meter cabinets shall the screened to blend in with the surrounding area to the satisfaction of the Municipality;

iv.) Any graffiti on the tower or on any Related Equipment shall be removed at the sole expense of the owner; and

v.) Any underground vaults related to Commercial Communication Towers shall be reviewed and approved by the Municipality.

iv. Design regulations:

i.) The WCF shall employ the most current Stealth Technology available in an effort to appropriately blend into the surrounding environment and minimize aesthetic impact. The application of the Stealth Technology chosen by the WCF Applicant shall be subject to the approval of the Municipality;

ii.) Commercial Communication Tower in the public ROW shall not exceed forty (40) feet in height;

iii.) To the extent permissible under state and federal law, any height extensions to an existing Commercial Communication Tower shall require prior approval of the Municipality, and shall not increase the overall height of the Commercial Communication Tower to more than forty (40) feet; and

iv.) Any proposed Commercial Communication Tower shall be designed structurally, electrically, and in all respects to accommodate both the WCF Applicant's antennae and comparable antennae for future users.

v. Relocation or Removal of Facilities. Within sixty (60) days following written notice from the Municipality, or such longer period

DRAFT

as the Municipality determines is reasonably necessary or such shorter period in the case of an Emergency, an owner of Commercial Communication Tower in the ROW shall, at its own expense, temporarily or permanently remove, relocate, change or alter the position of any WCF when the Municipality, consistent with its police powers and applicable Public Utility Commission regulations, shall determine that such removal, relocation, change or alteration is reasonably necessary under the following circumstances:

i.) The construction, repair, maintenance or installation of any Municipality or other public improvement in the Right-of-Way;

ii.) The operations of the Municipality or other governmental entity in the right-of-way;

iii.) Vacation of a street or road or the release of a utility easement; or

iv.) An emergency as determined by the Municipality.

vi. Reimbursement for ROW Use. In addition to permit fees as described in this section, every Commercial Communication Tower in the ROW is subject to the Municipality's right to fix annually a fair and reasonable fee to be paid for use and occupancy of the ROW. Such compensation for ROW use shall be directly related to the Municipality's actual ROW management costs including, but not limited to, the costs of the administration and performance of all reviewing, inspecting, permitting, supervising and other ROW management activities by the Municipality. The owner of each Commercial Communication Tower shall pay an annual fee to the Municipality to compensate the Municipality for the Municipality's costs incurred in connection with the activities described above.

12) Police powers. The Municipality, by granting any permit or taking any other action pursuant to this chapter, does not waive, reduce, lessen or impair the lawful police powers vested in the Municipality under applicable federal, state and local laws and regulations.

O. Commercial Commuter Lot

1) A traffic impact study shall be required;

2) A commercial commuter lot shall be located on lots with a minimum of five (5) acres in size; shall have side and rear yards of not less than twenty (20) feet when abutting non-residential zoning districts, and fifty (50) feet when abutting any R or S zoning district. Landscaping shall be provided at one (1) tree per three (3) off-street parking spaces, and shall be designed at the perimeter to provide an impervious screen, preventing direct view of parked vehicles from adjacent properties, and avoiding spill over light, glare, noise, and exhaust fumes onto adjacent properties, and designed interiorly to provide shade and visual relief;

DRAFT

3) Commercial commuter lot shall be located within one thousand (1,000) feet of an intersection of an arterial or collector street and shall provide a loading area for transit vehicles, situated either out of the road right-of-way or in the parking area, so as not to delay street traffic nor further congest area roadways. The commercial commuter lot shall be designed to have maneuvering space for those vehicles that utilize the commercial commuter lot, being able to travel the aisle ways, enter and exit the lot and individual spaces without endangering themselves, other vehicles or pedestrians. No off-street parking space shall be located so that a vehicle will maneuver within fifteen (15) feet of a vehicle entrance or exit to the commercial commuter lot;

4) A commercial commuter lot may have a controlled access booth and gate for collection of fees and security. Any such structure shall be constructed of brick, located so that it does not conflict with the internal circulation of the parking lot nor block any parking spaces and be compatible with the character of the surrounding neighborhood. Any driver of a vehicle utilizing this commercial commuter lot must be able to readily identify and distinguish queuing areas from other activities on-site. Queuing lanes shall be separate from internal circulation drives. The controlled access booth shall be set back to provide sufficient queuing area as not to allow vehicles to obstruct the public right-of-way area nor back into a public street. Any controlled access booth and gate shall not impede fire or emergency access;

5) A commercial commuter lot shall be surfaced in accordance with municipal codes, to include: a permanent, all-weather surface, either bituminous or concrete, with proper storm water detention facilities as required by the Storm Water Management Ordinance, 2700 with continuous six-inch (6") curbing;

6) Storm water detention facilities shall be built in accordance with municipal codes, including: The Storm Water Management Ordinance, 2700;

7) A commercial commuter lot shall have concrete bumper guards or wheel stops installed at all parking spaces. Parking perpendicular to the grade shall be permitted up to a grade of five percent (5%); parking parallel to the grade shall be permitted up to a grade of seven percent (7%); no parking shall be permitted on grade in excess of seven percent (7%);

8) A commercial commuter lot shall be divided into smaller parking fields, providing landscaped strips, peninsulas or grade separations at every twenty (20) to thirty (30) parking spaces, providing area for visual breaks, shade trees, pedestrian walkways and traffic circulation. Common areas shall be situated adjacent to any public transportation transit stop, and shall include a passenger loading area that is located and landscaped to take advantage of solar orientation, provide protection from prevailing wind and to afford summer shade and winter sunshine. Additionally, benches or other type of seating shall be furnished and other amenities such as, trash receptacles, drinking fountains, information kiosks and directories, and shelters shall be included to encourage the use of the Commercial Commuter Lot by the commuting public. A maximum of three vending machines may be situated in the common area, and shall be placed within a sheltered or screened structure.

9) A commercial commuter lot shall have off-street parking spaces and aisle widths meeting the following minimum specifications:

DRAFT

Table 501 Parking Stall and Aisle Requirements

Parking Angle (In Degrees)		90	60	45	30	Parallel
Stall Width		9 feet	9 feet	9 feet	9 feet	8 feet
Stall Length		18 feet	20 feet	19 feet	18 feet	24 feet
Aisle Width	One Way	22 feet	18 feet	12 feet	12 feet	12 feet
	Two Way	24 feet	24 feet	24 feet	24 feet	24 feet

DRAFT

Figure 501: 90 Degree Parking

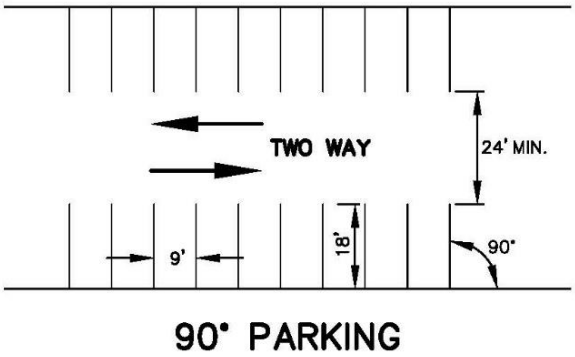

Figure 502: 60 Degree Parking

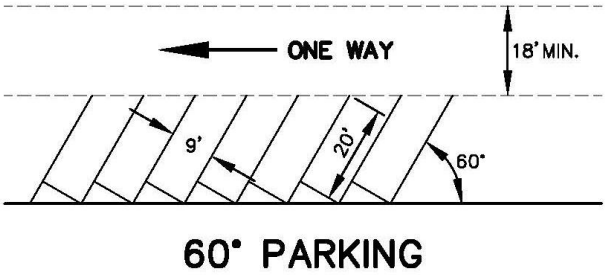

Figure 503: 45 Degree Parking

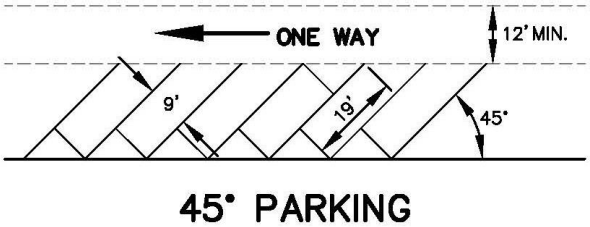

Figure 504: 30 Degree Parking

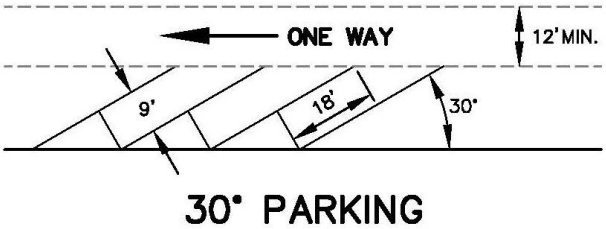

DRAFT

Figure 505: Parallel Parking

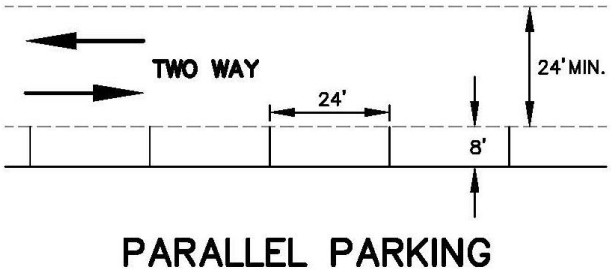

10) The tandem parking of vehicles is prohibited within commercial commuter lots. Dead-end aisles are prohibited within commercial commuter lots;

11) All commercial commuter lots shall clearly provide a separation between vehicular and pedestrian traffic. Parking lot surface strips of brick textured or colored paving and/or raised surface area shall be utilized to define pedestrian areas. Pavement intended for pedestrian traffic shall be stable, firm, skid resistant and shall not have an irregular surface that is uncomfortable or dangerous to traverse;

12) All commercial commuter lots shall be designed in compliance with the Americans with Disabilities Act;

13) All commercial commuter lots shall meet the following accessible parking space ratio:

Table 502: ADA Accessible Parking Requirements

Total Number of Parking Spaces	Total Minimum Number of Accessible Parking Spaces (60" and 96" aisles)	Van-Accessible Parking Spaces with minimum 96" wide access aisle	Accessible Parking Spaces with Minimum 60" wide access aisle
1 to 25	1	1	0
26 to 50	2	1	1
51 to 75	3	1	2
76 to 100	4	1	3
101 to 150	5	1	4
151 to 200	6	1	5
201 to 300	7	1	6
301 to 400	8	1	7
401 to 500	9	2	7
501 to 1,000	Two percent of total parking in each lot	One space out of eight accessible spaces	Seven spaces out of eight accessible spaces
1,001 and over	20 plus 1 for each 100 over 1,000	One space out of eight accessible spaces	Seven spaces out of eight accessible spaces

DRAFT

DRAFT

Figure 506: Design Standards for Accessible Parking Spaces for Cars

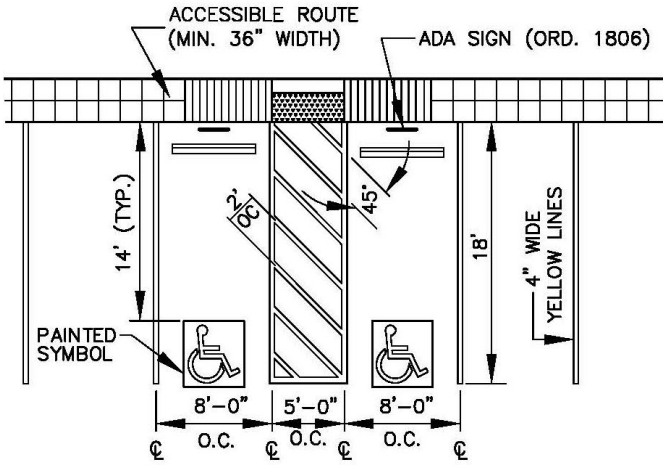

Figure 507: Design Standards for Accessible Parking Spaces for Vans

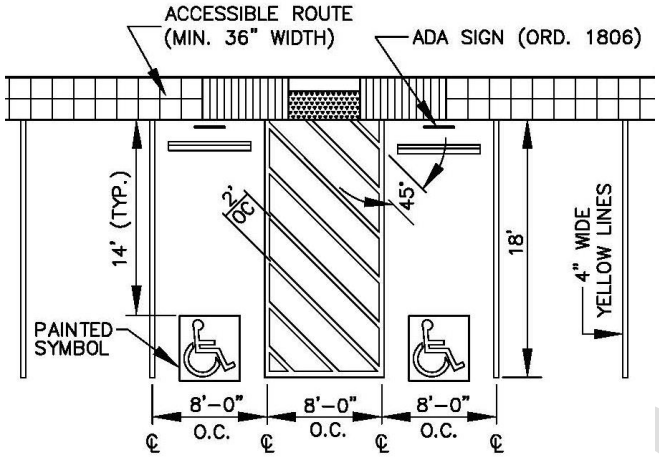

14) One (1) in every eight accessible spaces, but not less than one, shall be served by an access aisle eight (8) feet wide minimum and shall be designated van accessible;

15) All accessible parking spaces shall be located with the shortest accessible route of travel from a public transportation transit stop. Any accessible route shall have a minimum clear width of three (3) feet wide;

16) All accessible parking spaces shall be designated as reserved and marked with proper signage showing the symbol of accessibility, including a symbol sign mounted on a pole and a symbol painted on the parking surface. Additional signage shall be provided notifying patrons of municipal ordinances establishing a fee for the violation of parking in accessible parking areas;

17) A commercial commuter lot shall provide on-site lighting in all parking areas, aisles, turnarounds and pedestrian walkways, and shall be designed and arranged with a 0.5 minimum foot-candle lumens and not to exceed a maximum of 1.0 foot-candle lumens at the property lines bordering residentially zoned properties;

DRAFT

18) Bicycle parking shall be included for a minimum of one bicycle per 25 automobile spaces;

19) Park and ride facilities shall be equipped and controlled to discourage illegal parking, vandalism and other unlawful or nuisance-creating activities;

20) Barriers such as bollards, curbs, or bumper blocks must be provided for parking spaces perpendicular to sidewalks and buildings.

21) No sign of any kind other than conditions of use shall be maintained on any park and ride facility;

22) All light poles, standards and fixtures shall be of a low-profile decorative variety and shall be compatible with the character of the surrounding neighborhood. Additionally, those light poles, standards and fixtures shall not exceed a height of twenty (20) feet above grade level in areas abutting commercially zoned districts, and fourteen (14) feet above grade level in commercial commuter lots abutting a, BLVD, R and S Zoning Districts; and

23) A Commercial Commuter Lot shall provide specially designated areas reserved for carpools/vanpools, and shall be located in preferential areas of the Commercial Commuter Lot, such as a close walking distance to the loading and unloading area of the public transportation transit stop, tree-shaded areas and sidewalk or plaza areas.

P. Community Center

1) A traffic impact study shall be required;

2) Parking spaces shall be located no more than three hundred (300) feet from the primary entrance of the building;

3) The primary vehicular entrance to the building shall have direct access to a public street;

4) All waste collection/storage areas shall be located at least fifty (50) feet from the nearest building and shall be enclosed by a solid masonry screen wall;

5) All mechanical equipment shall be screened from the view of adjoining properties;

6) A Community Center shall provide on-site lighting in all parking areas, aisles, turnarounds and pedestrian walkways, and shall be designed and arranged with a 0.5 minimum foot-candle lumens and not to exceed a maximum of 1.0 foot-candle lumens at the property lines bordering residentially zoned properties;

7) Outdoor speakers shall be permitted for emergency announcements and crowd control only. Events may not be broadcast to the exterior of the building;

8) Ingress, egress, and internal traffic circulation shall be designed to ensure access by emergency vehicles; and

9) Shall have no structures within fifty (50) feet of any property line.

DRAFT

Q. Condominium

1) A traffic impact study shall be required;

2) Parking spaces shall be located no more than three hundred (300) feet from the primary entrance of the apartment building;

3) Where two (2) or more buildings exist on the same lot, the minimum distance between buildings shall be twenty (20) feet or fifty percent (50%) of the height of the taller building, whichever is greater;

4) The primary vehicular entrance to the apartment shall have direct access to a public street;

5) A twenty (20)-foot wide fire/emergency access route shall be provided around the perimeter of each building;

6) All mechanical equipment shall be screened from the view of adjoining properties;

7) All off-street parking areas adjacent to a single-family dwelling or property in any Residential Zoning District shall be screened by a minimum six (6) foot high compact evergreen hedge; and

8) All waste collection/storage areas shall be located at least fifty (50) feet from the nearest building and shall be enclosed by a solid masonry screen wall.

R. Continuing Care Facility Also see: *"Assisted Living Facility", "Group Home", "Hospice", "Nursing Home Facility", "Personal Care Home Facility", "Skilled Nursing Facility".*

1) A traffic impact study shall be required;

2) A Continuing Care Facility shall be located on property, which consists of one or more Lots and contains a minimum of one (1) acre. If more than one Lot or parcel is used, they must be contiguous. Continuing Care Facilities occupying more than one Lot or parcel shall obtain Subdivision approval consolidating such Lots;

3) All structures shall be set back a minimum of forty (40) feet from all property lines;

4) The site shall have frontage on and direct vehicular access to a public road;

5) Shall not be approved unless plans prepared by an architect or engineer are submitted which clearly indicate that adequate light, ventilation and fireproofing are provided;

6) The dwelling facility and its accommodations shall be functional and convenient with regard to the specific needs of the group to be housed in the facility;

7) Adequate open space opportunities for recreation shall be provided on the lot for the residents consistent with their needs and the area shall be secured by a fence with self-latching gate;

8) Shall be approved only after Council has found that plans and programs for management of the dwelling are adequate and appropriate to the population to

DRAFT

be housed and that adequate provisions have been made to assure the safety and welfare of the residents of the facility and of the adjacent neighborhood;

9) All mechanical equipment shall be screened from the view of adjoining properties;

10) All waste collection/storage areas shall be located at least fifty (50) feet from the nearest building and shall be enclosed by a solid masonry screen wall.

11) The Lot Coverage by all Principal and Accessory Buildings shall not exceed forty percent (40%);

12) Ingress, egress, and internal traffic circulation shall be designed to ensure access by emergency vehicles;

13) The parking and circulation plan shall be referred to the Fire Official for comments regarding traffic safety and emergency access;

14) The applicant shall file a detailed statement of intent describing the proposed use of the building, in which the statement shall detail the proposed number and nature of the anticipated occupants;

15) Shall be in compliance with the Pennsylvania Department of Health, Department of Public Welfare, and Department of Mental Health standards applicable at the time of issue of license, and with the latest revision of licensing requirements. A license or certification shall be obtained from all appropriate governmental agencies prior to the issuance of an occupancy permit

16) A Certificate of Occupancy shall be required before any Unit may be occupied;

17) Any change in the conditions of original approval shall constitute a new use and the full procedure for obtaining approval of the conditional use shall be required.

S. Contractor's Yard

1) A traffic impact study shall be required;

2) The business shall include a permanent building, of not less than one thousand (1,000) square feet, on the lot for office, storage or minor assembly use;

3) Areas used for the storage of supplies and equipment shall be screened from view of abutting properties and from abutting roads;

4) Areas of the lot not occupied by buildings or by storage areas shall be either paved or landscaped;

5) All mechanical equipment shall be screened from the view of adjoining properties;

6) All waste collection/storage areas shall be located at least fifty (50) feet from the nearest building and shall be enclosed by a solid masonry screen wall;

7) No Contractor's Yard shall be permitted which is noxious, offensive or hazardous by reason of hours of operation, vehicular traffic, generation or emission of noise, vibration, smoke, dust or other particulate matter, odorous matter, heat, humidity, glare, refuse, radiation or other objectionable emissions; and

DRAFT

8) Material storage area shall be a dust-free, all-weather surface such as asphalt, concrete or compacted gravel.

T. Convention Center

1) A traffic impact study and a parking demand analysis shall be required;

2) Shall be located on lots with a minimum of five (5) acres in size; shall have side and rear yards of not less than twenty (20) feet when abutting non-residential zoning districts, and fifty (50) feet when abutting any R or S zoning district;

3) The site shall have frontage on and direct vehicular access to a public road;

4) Ingress, egress, and internal traffic circulation shall be designed to minimize congestion during peak usage of the facility;

5) Parking lot design requirements must comply with Article IX of this ordinance;

6) Access for the development site shall be provided from nonresidential streets and shall not require the use of any residential collector or residential local streets;

7) A landscaped strip shall screen all property lines, which adjoin residential uses or residential zoning districts, at least fifty (50) feet in depth, which shall be comprised of a combination of high level and low-level plantings. Such screening shall be a minimum of six (6) feet in height for high level and two (2) feet in height for low level plants at the time of installation. Existing vegetation shall be used to meet these criteria at the discretion of the Municipality;

8) No direct beams or rays of light from exterior lighting fixtures, signs or vehicles maneuvering on the development site, shall be permitted to shine into the private living areas and associated open spaces of adjacent residential properties;

9) All mechanical equipment shall be screened from the view of adjoining properties;

10) All waste collection/storage areas shall be located at least fifty (50) feet from the nearest building and shall be enclosed by a solid masonry screen wall.

11) The storage of equipment or materials in close proximity to the principal use shall be permitted in a roofed structure with either opaque vertical walls or heavy vegetative planting around the perimeter, which provides an effective screen from adjacent properties; and

12) Outdoor speakers shall be permitted for emergency announcements and crowd control only. Events may not be broadcast to the exterior of the building / event center.

U. Correctional Institution

1) A traffic impact study and a parking demand analysis shall be required;

2) All applicable federal, state and county permits shall be applied for prior to application for conditional use and documentation of said application(s) shall be made a part of the conditional use application;

DRAFT

3) All parking areas shall be screened from view from public or private roads;

4) All structures shall be a minimum of one hundred and fifty (150) feet from all property lines;

5) Shall be located on lots with a minimum of ten (10) acres in size; shall have side and rear yards of not less than twenty (20) feet when abutting non-residential zoning districts, and fifty (50) feet when abutting any R or S zoning district;

6) All waste collection/storage areas shall be located at least fifty (50) feet from the nearest building and shall be enclosed by a solid masonry screen wall;

7) All mechanical equipment shall be screened from the view of adjoining properties;

8) Access shall be from a public road only; and

9) An evacuation plan shall be submitted to The Municipality for review and approval.

V. Data Center

1) Principal Building Facades. Principal building facades shall include all building facades that face adjacent public roads. Principal building facades associated with new construction shall meet the following standards:

   a) Principal building facades shall avoid the use of undifferentiated surfaces by including at least two (2) of the following design elements: change in building height, building step-backs or recesses, fenestration, change in building material, pattern, texture, color, or use of accent materials.

   b) When a building has more than one principal facade, such principal building facades shall be consistent in terms of design, materials, details, and treatment

2) Screening of Mechanical Equipment. In order to minimize visibility from adjacent roads and adjacent properties, ground level and roof top mechanical equipment shall be screened. This screening may be provided by a principal building. Mechanical equipment not screened by a principal building shall be screened by a visually solid fence, screen wall or panel, parapet wall, or other visually solid screen that shall be constructed of materials compatible with those used in the exterior construction of the principal building. Notwithstanding the requirements of this section, mechanical equipment located in a manner found to have no adverse impact on adjacent roads and adjacent properties, as determined by the Zoning Administrator, shall not be required to be screened.

3) No direct beams or rays of light from exterior lighting fixtures, signs or vehicles maneuvering on the development site, shall be permitted to shine into the private living areas and associated open spaces of adjacent residential properties

4) Exterior Lighting. All exterior lighting shall be designed and constructed with cutoff and fully shielded fixtures that direct light downward and into the interior of the property and away from adjacent roads and adjacent properties

5) Shall provide landscape buffering as per Articlce VIII.

6) Shall not have any tank for the storage of flammable or otherwise hazardous material closer than fifty (50') feet to any property line, nor closer to any residential property than one hundred (100) feet;

7) All waste collection/storage areas shall be located at least fifty (50) feet from the nearest building and shall be enclosed by a solid masonry screen wall;

W. Day Spa

1) See: *"Athletic Facility", "Fitness Center", "Gymnasium", "Membership Club", "Recreational Facility", "Sports Facility".*

X. Dependent Dwelling (Granny Flat)

1) Dependent Dwellings shall not be located on lots of less than 7,200 square feet;

2) Shall only be permitted as an Accessory Structure;

3) The Structure is not to be placed within any required Yard;

4) Limited to 2 Stories or 25';

5) Each story is limited to 625 square feet (Not less than 400 sf);

6) Contains no more than one bedroom;

7) All mechanical equipment shall be screened from the view of adjoining properties;

8) All waste collection/storage areas shall be located at least fifty (50) feet from the nearest building and shall be enclosed by a solid masonry screen wall;

9) May be erected within the required side or rear yards, provided that such an accessory structure is not located closer than 20 feet to the rear lot line or 10 feet to the side lot line; and

10) If the Dependent Dwelling is attached to the principal structure, then it shall be considered part of the principal structure and shall be subject to all requirements relating to the principal structure. Detached accessory structures shall maintain a separation of at least 10 feet from the principal structure.

Y. Distribution Center

1) A traffic impact and parking analysis study shall be required;

DRAFT

2) Shall not be located on lots of less than five (5) acres;

3) Shall have side yards of not less than twenty (20) feet;

4) Shall not have any tank for the storage of flammable or otherwise hazardous material closer than fifty (50') feet to any property line, nor closer to any residential property than one hundred (100) feet;

5) No direct beams or rays of light from exterior lighting fixtures, signs or vehicles maneuvering on the development site, shall be permitted to shine into the private living areas and associated open spaces of adjacent residential properties;

6) Access for the site shall be provided from nonresidential streets;

7) All mechanical equipment shall be screened from the view of adjoining properties;

8) All waste collection/storage areas shall be located at least fifty (50) feet from the nearest building and shall be enclosed by a solid masonry screen wall;

9) Outdoor speakers shall be permitted for emergency announcements only;

10) The site shall be such that no truck will back off of or onto a public right-of-way; and

11) Shall provide landscape buffering as per Articlce VIII.

Z. Drive-in Theater

1) A traffic impact and parking analysis study shall be required;

2) Shall provide storage space for waiting automobiles between the ticket gate and the highway equal to thirty-five (35%) of the capacity of the theater;

3) Shall have no structure within fifty (50) feet of any property line;

4) Shall provide individual car speakers;

5) All mechanical equipment shall be screened from the view of adjoining properties;

6) All waste collection/storage areas shall be located at least fifty (50) feet from the nearest building and shall be enclosed by a solid masonry screen wall.

7) shall serve no persons other than patrons from refreshment stands; and

8) The screen shall not be higher than one hundred (100) feet, nor be visible from any highway or abutting residential district nor be closer than one hundred (100) feet to any property line.

AA. Driving Range

1) A traffic impact and parking analysis study shall be required;

DRAFT

2) All buildings shall be located at a minimum of fifty (50) feet from all property lines and buffered in accordance with Article VIII;

3) The teeing areas, greens and hitting fields shall be designed and *setback* sufficiently to prevent golf balls from being hit onto property under separate ownership, including but not limited to:

   a) Tees, hitting fields and greens shall be designed to encourage the direction of play away from adjacent properties; and

   b) Fence, netting and/or vegetative buffer yards shall be installed/planted to protect public streets, private access roads, other right of way areas and adjacent properties, occupants, visitors and/or vehicles. The height of any fence and/or netting shall be determined on a site-specific basis and may exceed the requirements of §805, Fences and Hedges of this Ordinance;

4) Access shall be provided for fire, emergency and other safety vehicles;

5) The maximum height of lights shall not exceed thirty-five (35) feet and the lighting produced shall be shielded and directed away from adjoining properties;

6) The maximum height of all pole/pylon signage shall not exceed ten (10) feet and sixty-five (65) square feet in size;

7) All wall or roof sign shall not exceed fifty (50) square feet in size;

8) All mechanical equipment shall be screened from the view of adjoining properties;

9) All waste collection/storage areas shall be located at least fifty (50) feet from the nearest building and shall be enclosed by a solid masonry screen wall.

10) Driving range hours of operation and activities shall be appropriately scheduled to protect the surrounding neighborhood from detrimental noise, disturbance or interruption; and

11) The owner/operator shall comply with all governmental agencies, regulations and laws.

BB. Educational Institution

1) Reference "School" item BBBB. (below) and Vocational School SSSS. (below)

CC. Fitness Center

1) See:*"Athletic Facility," "Day Spa," "Gymnasium," "Membership Club," "Recreational Facility," "Sports Facility."*

DD. Food Processing

1) A traffic impact and parking analysis study shall be required;

2) Shall not be located on lots of less than two acres;

3) Shall have side yards of not less than twenty (20) feet;

DRAFT

4) Shall not have any tank for the storage of flammable or otherwise hazardous material closer than fifty (50') feet to any property line, nor closer to any residential property than one hundred (100) feet;

5) All mechanical equipment shall be screened from the view of adjoining properties;

6) All waste collection/storage areas shall be located at least fifty (50) feet from the nearest building and shall be enclosed by a solid masonry screen wall;

7) The site shall be such that no truck will back off of or onto a public right-of-way; and

8) Shall provide landscape buffering as per Articlce VIII;

EE. Fuel Service and/or Charging Station

1) A traffic impact and parking analysis study shall be required;

2) A fuel service station shall be located on a lot not less than eighteen thousand (18,000) square feet;

3) A canopy over the gas pumps shall be permitted, provided that;

   a) The canopy shall not be enclosed;

   b) The canopy shall be located a minimum of forty (40) feet from any property line or street right-of-way line; and

   c) The canopy shall be removed immediately if the principal use is changed or discontinued.

4) All automatic or self-serve vehicle washing operations, shall comply with §504. GGGG, Vehicle Wash, Automatic or Self-Serve.

5) No open-air, outdoor storage of materials, merchandise, and equipment shall be permitted;

6) Outdoor speakers shall be permitted for emergency announcements only;

7) A minimum fifteen-foot buffer shall be maintained between the use and all adjoining properties. Screening shall be provided along all lot lines abutting adjacent property to block any view of vehicle service station operations and stored material and equipment from all points on such property when viewed from ground level;

8) All mechanical equipment shall be screened from the view of adjoining properties;

9) All waste collection/storage areas shall be located at least fifty (50) feet from the nearest building and shall be enclosed by a solid masonry screen wall.

DRAFT

10) Refuse and trash shall be stored outdoors only if placed in closed containers located in an area screened from view at all points on any public or private property or street when viewed from ground level;

11) All fuel, oil, other flammable substances, associated ventilation equipment and charging stations shall be stored or located at least fifty (50) feet from any lot line; and

12) There shall be no parking of motor vehicles, trucks, tractors or trailers in excess of forty-eight (48) hours.

FF. Garden Apartment

1) A traffic impact study shall be required;

2) Parking spaces shall be located no more than three hundred (300) feet from the primary entrance of the building;

3) Where two (2) or more buildings exist on the same lot, the minimum distance between buildings shall be twenty (20) feet or fifty percent (50%) of the height of the taller building, whichever is greater;

4) All mechanical equipment shall be screened from the view of adjoining properties;

5) The primary vehicular entrance to the development shall have direct access to a public street; and

6) All waste collection/storage areas shall be located fifty (50) feet from the nearest building and shall be enclosed by a solid masonry screen wall.

GG. G
as Station

1) See: Fuel Service Station and/or Charging Station

FF. Golf Course

1) A traffic impact study and a parking demand analysis shall be required;

2) Golf course club house or other similar accessory structure shall be located at a minimum of fifty (50) feet from all property lines;

3) Golf course maintenance buildings and/or sheds shall be located at a minimum of fifty (50) feet from all property lines and buffered in accordance with §806. Buffer yards;

4) Twenty-five (25) feet of vegetative buffer shall be provided in area abutting properties under separate ownership;

5) All mechanical equipment shall be screened from the view of adjoining properties;

6) The playing areas and hitting fields shall be designed and setback sufficiently to prevent golf balls from being hit onto property under separate ownership, including but not limited to;

DRAFT

a) Tees, fairways and greens shall be designed to encourage the direction of play away from adjacent properties; and

b) Fence, netting and/or vegetative buffer yards shall be installed/planted to protect public streets, private access roads, other right of way areas and adjacent properties, occupants, occupant's guest and/or vehicles. The height of any fence and/or netting shall be determined on a site-specific basis and may exceed the requirements of §805, Fences of this Ordinances;

7) Access shall be provided for fire, emergency and other safety vehicles;

8) Lights shall be shielded and directed away from adjoining properties;

9) All waste collection/storage areas shall be located at least fifty (50) feet from the nearest building and shall be enclosed by a solid masonry screen wall;

10) A golf course's hours of operation and activities shall be appropriately scheduled to protect the surrounding neighborhood from detrimental noise, disturbance or interruption; and

11) The owner/operator shall comply with all governmental agencies, regulations and laws.

FF. Gun Range, Indoor

1) No person shall engage in the operation of an indoor shooting range in the Municipality unless such person has obtained permit from the Municipality and paid the required fees set forth in the *"FEE SCHEDULE."*

2) Indoor shooting ranges shall have walls, ceilings, and floors that are impenetrable to the ammunition discharged by firearms being used within it or have internal baffling built so that the ammunition discharged cannot hit the walls or ceiling. Doors and windows which are in front of the firing points must be bolted from the inside and must comply with this subsection as part of the building walls at all times the facility is in use. Gas projectiles and incendiary devices shall not be used in such facilities. Protective stalls shall be built between each firing point used for the discharge of a pistol.

3) Indoor shooting ranges shall be constructed and insulated in such a manner that prevents sound from the discharge of firearms within the facility to escape outside the premises or disturb the peace of other persons outside the premises. Hearing protectors, which fully cover the shooter's ears, shall be provided by the indoor shooting range, made available for all shooters or other persons in the firing area, and are required to be worn at all times in the firing area.

4) Nothing in this section shall be construed to exempt any indoor shooting range, its construction, remodeling, or operation from any applicable city, state, or federal law, rule, or regulation.

5) All indoor shooting ranges and instructors at any shooting range shall be certified by the National Rifle Association or by the State of Pennsylvania.

6) Indoor shooting ranges shall be located only in C-2 Business Commercial, C-3 Mixed Use, L Special Use, M-1 Planned Industrial, M-2 Heavy Industrial and BLVD Boulevard zoning districts.

7) Any person operating an indoor shooting range, which was not open, operating and permitted prior to the enactment of this Article, shall not be allowed to operate the facility for any purpose until the zoning requirements for such establishments have been satisfied.

8) All operators of indoor shooting ranges shall keep and maintain any legally required records regarding the use of the range and the sale of firearms and ammunition by the operator. All such records shall be open for inspection during all hours of operation by the chief of police or his designee. The chief of police or his designee shall also have the right to inspect the operation of the indoor shooting range during all hours of operation to verify the safe operation of the facility.

9) It shall be unlawful and an offense for any owner, manager, operator, or employee of an indoor shooting range to permit any person or persons to bring any intoxicating liquor, intoxicating substance, low point beer, controlled dangerous substance or other intoxicating compound or dangerous substance on the premises of any indoor shooting range; to permit the consumption of the same on the premises; or to permit them to be left at any place on the premises. It shall be unlawful and an offense for any person operating a range to permit any intoxicated or chemically impaired person to be or remain on the premises.

10) It shall be unlawful and an offense for any person to discharge any firearm within an indoor shooting range in a manner that violates any provision of this article or so that the shot, projectile, bullet, or fragments avoid the backstop and other safety precautions and escape the confines of any indoor shooting range causing bodily injury to a person on the premises. An owner, manager, operator, employee, or agent of an indoor shooting range shall supervise the users of the facility and shall remove and bar from the premises any person who refuses to comply with generally accepted safety practices, within the provisions of this article or comply with the rules and regulations concerning safety imposed by the operator.

11) The Municipality is not responsible for anyone injured on the range. An individual using the range does so at his own risk and assumes all responsibility for injuries to a person or property caused by or to him.

12) The application for a license shall be made in writing, and said application shall contain the following information:

a. Name of applicant, stating whether individual, partnership, corporation or association.
b. Address of applicant.
c. Age of applicant (individual's age, or date of incorporation or formation if a business entity).
d. If applicant is not an individual, name and addresses of all officers and members (if there are more than 5 such officers and members, the list shall include only the managing officers, and those persons or entities which collectively own majority interests).

DRAFT

e. Location and legal description of the premises sought to be licensed, and a statement of whether the premises are owned or leased by applicant.
f. Qualifications and experience of applicant.
g. Designation of service agent for service of legal process.
h. Any other information the Chief of Police or his designee may deem necessary.

13) Prior to the issuance of any license, or the renewal of any license, the Chief of Police or his designee shall inspect the range to see that all requirements of this section are met. Such inspector may inspect the range more often as needed. The operator, by applying for a license, consents to such safety inspections during any normal business hours

14) .No license granted under this section shall ever be held to bar a prosecution for violation of any other ordinance of the Municipality, or to prevent the enforcement of any ordinance or inhibit the exercise of powers and duties of any officer under the terms of any such ordinance.

15) A license issued for the operations of a shooting range shall set forth the name and location of the range covered by such license, name or names of those persons to whom the license is issued, and any other information the Chief of Police or his designee may deem necessary.

16) Such license shall be placed and maintained at all times in an open, prominent and conspicuous place inside the range

17) Insurance Requirements: The owner of the range, whether individual, or corporation, or other business entity, shall carry liability insurance protecting the general public and users of the range against any injury resulting from the discharge of firearms in the range in an amount no less than one million dollars ($1,000,000.00).

18) Alcohol Prohibited: It shall be unlawful for any licensee to permit any person or persons to bring any alcoholic beverages or non-intoxicating beverages on the premises of any range, or to permit the consumption of same on the premises, or to permit same to be left at any place on the premises. It shall be unlawful for any person operating a range to permit any intoxicated person to be or remain therein.

19) Any shooting range establishment, gun smith, or firearm retailer shall be authorized and encouraged to utilize a discharge barrel or other similar safety apparatus to ensure the safe handling of firearms.

20) A sign stating the rules and regulations of the range operation shall be placed in a prominent and conspicuous location within the range.

21) Mandatory Reporting: If at any time, an accidental discharge involves injury or death, the licensee shall provide a written Incident Report that shall include the following:

2. Name of shooter.
3. Name of victim.
4. Time and date of the incident.
5. Detailed statement of the events that occurred.

1)

2) It shall be unlawful and an offense for any person to manage or operate any indoor shooting range in any manner which violates the requirement of this code.

3) Every person charged with violating this Article upon conviction in municipal court may be punished as provided in Chapter 1, Section 1-1-119 of this code. No person convicted of violating this section shall be eligible to hold or apply for the annual indoor shooting range permit.

FF. Gun Range, Outdoor

1) Outdoor shooting ranges shall be located no less than 3,500 feet (from property line to property line) from any school (public or private), municipal park, religious establishment or existing or approved residential uses.

2) An outdoor facility that may or may not include a clubhouse but which includes facilities for one or more of the following activities: archers, target shooting, skeet or trap shooting, marksmanship and similar activities.

3) Rifle and handgun ranges are open from 8 a.m., prevailing time, until sunset Monday through Saturday and from 12 noon to sunset Sunday, unless otherwise posted

4) The range shall not exceed 250 yards in length.

5) The backstop of the range shall be a hill, clear of all objects from which bullets might ricochet and of such size and character that a miss of the target by 15 feet by the rifle used could not penetrate the hill backstop.

6) The owner is responsible for keeping the area clean and free of debris, and may not discard, deposit, leave or throw litter except in approved refuse containers. Range users shall remove targets from range backboards when shooting is completed and prior to leaving the range.

7) The Municipality is not responsible for anyone injured on the range. An individual using the range does so at his own risk and assumes all responsibility for injuries to a person or property caused by or to him.

8) An individual under 16 years of age may not use the range unless accompanied by a person 18 years of age or older.

9) *Prohibited acts:*
   a) Discharge a firearm from any location on the range other than an established shooting station on the firing line.
   b) Discharge armor piercing, incendiary, explosive, tracer or multiple projectile ammunition.
   c) Be intoxicated, use or possess an intoxicating beverage or controlled substance on the range.
   d) Discharge an automatic firearm.
   e) Operate, manipulate or discharge a firearm in negligent disregard for the safety of other persons present at or nearby the range. This is specifically intended to include loading a firearm, operating or manipulating a loaded firearm, or

DRAFT

discharging a firearm anywhere on the firing range while another person is downrange.

f) It shall be unlawful for any person to discharge any firearm in a manner so that the shot, bullets or fragments thereof will avoid the backstop and other safety precautions and escape the confines of the range, or cause bodily injury to persons on the range. The operator shall supervise the users of the range, and shall remove and bar from the range any person who refuses to comply with generally accepted safety practices, or with this section, or with the rules and regulations concerning safety imposed by the operator.

10) The application for a license shall be made in writing, and said application shall contain the following information:
   a. Name of applicant, stating whether individual, partnership, corporation or association.
   b. Address of applicant.
   c. Age of applicant (individual's age, or date of incorporation or formation if a business entity).
   d. If applicant is not an individual, name and addresses of all officers and members (if there are more than 5 such officers and members, the list shall include only the managing officers, and those persons or entities which collectively own majority interests).
   e. Location and legal description of the premises sought to be licensed, and a statement of whether the premises are owned or leased by applicant.
   f. Qualifications and experience of applicant.
   g. Designation of service agent for service of legal process.
   h. Any other information the Chief of Police or his designee may deem necessary.

11) Prior to the issuance of any license, or the renewal of any license, the Chief of Police or his designee shall inspect the range to see that all requirements of this section are met. Such inspector may inspect the range more often as needed. The operator, by applying for a license, consents to such safety inspections during any normal business hours

12) .No license granted under this section shall ever be held to bar a prosecution for violation of any other ordinance of the Municipality, or to prevent the enforcement of any ordinance or inhibit the exercise of powers and duties of any officer under the terms of any such ordinance.

13) A license issued for the operations of a shooting range shall set forth the name and location of the range covered by such license, name or names of those persons to whom the license is issued, and any other information the Chief of Police or his designee may deem necessary.

14) Such license shall be placed and maintained at all times in an open, prominent and conspicuous place inside the range

15) Insurance Requirements: The owner of the range, whether individual, or corporation, or other business entity, shall carry liability insurance protecting the general public and users of the range against any injury resulting from the discharge of firearms in the range in an amount no less than one million dollars ($1,000,000.00).

DRAFT

16) Alcohol Prohibited: It shall be unlawful for any licensee to permit any person or persons to bring any alcoholic beverages or non-intoxicating beverages on the premises of any range, or to permit the consumption of same on the premises, or to permit same to be left at any place on the premises. It shall be unlawful for any person operating a range to permit any intoxicated person to be or remain therein.

17) Any shooting range establishment, gun smith, or firearm retailer shall be authorized and encouraged to utilize a discharge barrel or other similar safety apparatus to ensure the safe handling of firearms.

18) A sign stating the rules and regulations of the range operation shall be placed in a prominent and conspicuous location within the range.

19) All mechanical equipment shall be screened from the view of adjoining properties;

20) All waste collection/storage areas shall be located at least fifty (50) feet from the nearest building and shall be enclosed by a solid masonry screen wall.

21) Mandatory Reporting: If at any time, an accidental discharge involves injury or death, the licensee shall provide a written Incident Report that shall include the following:
    a) Name of shooter.
    b) Name of victim.
    c) Time and date of the incident.
    d) Detailed statement of the events that occurred.

GG. Gymnasium

1) See: *"Athletic Facility", "Day Spa", "Fitness Center", "Membership Club", "Recreational Facility", "Sports Facility".*

HH. Helipad

1) The minimum site area shall be five (5) acres;

2) Such use shall be designed and operated in conformance with all regulations of the Federal Aviation Administration (FAA) and the State Bureau of Aviation;

3) No fuel, helicopters or maintenance equipment shall be stored on site;

4) No maintenance or repair work shall be done on site;

5) A minimum 100-foot setback shall be maintained between the center of the helipad and other buildings on the same lot and from any public street, any dwelling and/or school;

6) A minimum 1,000-foot setback shall be maintained between the center of the helipad and any residential dwelling and/or school;

7) All mechanical equipment shall be screened from the view of adjoining properties;

DRAFT

8) All waste collection/storage areas shall be located at least fifty (50) feet from the nearest building and shall be enclosed by a solid masonry screen wall.

9) Hours for take-off and landing shall be scheduled to minimize negative impacts on surrounding residential activity; and

10) No parking area or waiting room shall be permitted on site.

II. Heliport

1) The minimum site area shall be five (5) acres;

2) Such use shall be designed and operated in conformance with all regulations of the Federal Aviation Administration and the State Bureau of Aviation;

3) Fuel, helicopters or maintenance equipment may be stored on site;

4) Maintenance or repair work may be conducted on site;

5) A minimum 100-foot setback shall be maintained between the center of the heliport and other buildings on the same lot and from any public street, any dwelling and/or school;

6) A minimum 1,000-foot setback shall be maintained between the center of the heliport and any residential dwelling and/or school;

7) All mechanical equipment shall be screened from the view of adjoining properties;

8) All waste collection/storage areas shall be located at least fifty (50) feet from the nearest building and shall be enclosed by a solid masonry screen wall.

9) Hours for take-off and landing shall be scheduled to minimize negative impacts on surrounding residential activity; and

10) No parking area or waiting room shall be permitted on site

JJ. Helistop

1) The minimum site area shall be five (5) acres;

2) Such use shall be designed and operated in conformance with all regulations of the Federal Aviation Administration and the State Bureau of Aviation;

3) No fuel, helicopters or maintenance equipment shall be stored on site;

4) No maintenance or repair work shall be done on site;

5) A minimum 100-foot setback shall be maintained between the center of the helistop and other buildings on the same lot and from any public street;

6) A minimum 1,000-foot setback shall be maintained between the center of the helistop and any residential dwelling and/or school;

DRAFT

7) All mechanical equipment shall be screened from the view of adjoining properties;

8) All waste collection/storage areas shall be located at least fifty (50) feet from the nearest building and shall be enclosed by a solid masonry screen wall.

9) Hours for take-off and landing shall be scheduled to minimize negative impacts on surrounding residential activity; and

10) No parking area or waiting room shall be permitted on site

KK. Hobby Farm:

1) A hobby farm is permitted as a conditional use in the R-1 and R-2 Residential Districts;
2) The minimum lot area for a hobby farm is five (5) acres;
3) The owner of the hobby farm shall reside on the lot;
4) Hobby farms may include any of the activities encompassed by agriculture, as defined by this chapter. The sale of agricultural products raised on the hobby farm shall be permitted. Private stables are also permitted and included in the definition of hobby farm;
5) The number of domestic animals maintained on a hobby farm, if any, shall be reasonably related to the size of the lot, the area available for grazing, and the capacity of the land to sustain the animals without creating a nuisance;
6) On a lot utilized for a private stable, one horse or pony shall be permitted on the first three acres of land. One additional horse or pony shall be permitted for each additional acre over three acres. However, no private stalls or hobby farm shall have more than a total of eight horses or ponies at any one time;
7) No stables or buildings in which animals are kept or manure is stored shall be located within 75 feet of any lot line or within 100 feet of any occupied dwellings within the parcel or located on adjacent parcel, other than the stable owner's dwelling;
8) No grazing of any domestic animals shall be permitted closer than 50 feet from an occupied dwelling unit within the parcel or located on an adjacent parcel, excluding the private stable or hobby farm owner's dwelling;
9) A hobby farm owner shall not permit litter and droppings from their horses or any other animals to collect so as it results in a presence of fly larvae or objectionable odors;
10) All mechanical equipment shall be screened from the view of adjoining properties;
11) All waste collection/storage areas shall be located at least fifty (50) feet from the nearest building and shall be enclosed by a solid masonry screen wall;
12) The area of the lot used for grazing shall be adequately fenced to properly enclose the animals and to protect adjacent lots; and

DRAFT

13) The primary residence/principal structure on the lot shall meet the zoning districts lot area and bulk requirements.

LL. Hospice *Also see: "Assisted Living Facility", "Continuing Care Facility", "Nursing Home Facility", "Personal Care Home Facility", "Skilled Nursing Facility".*

1) A traffic impact study shall be required;

2) A Hospice facility shall be located on property, which consists of one or more Lots and contains a minimum of one (1) acre. If more than one Lot or parcel is used, they must be contiguous. Hospice facilities occupying more than one Lot or parcel shall obtain Subdivision approval consolidating such Lots;

3) All structures shall be set back a minimum of forty (40) feet from all property lines;

4) The site shall have frontage on and direct vehicular access to a public road;

5) Shall not be approved unless plans prepared by an architect or engineer are submitted which clearly indicate that adequate light, ventilation and fireproofing are provided;

6) The dwelling facility and its accommodations shall be functional and convenient with regard to the specific needs of the group to be housed in the facility;

7) Shall be approved only after Council has found that plans and programs for management of the dwelling are adequate and appropriate to the population to be housed and that adequate provisions have been made to assure the safety and welfare of the residents of the facility and of the adjacent neighborhood;

8) All mechanical equipment shall be screened from the view of adjoining properties;

9) All waste collection/storage areas shall be located at least fifty (50) feet from the nearest building and shall be enclosed by a solid masonry screen wall;

10) The Lot Coverage by all Principal and Accessory Buildings shall not exceed forty percent (40%);

11) Ingress, egress, and internal traffic circulation shall be designed to ensure access by emergency vehicles;

12) The parking and circulation plan shall be referred to the Fire Official for comments regarding traffic safety and emergency access;

13) The applicant shall file a detailed statement of intent describing the proposed use of the building, in which the statement shall detail the proposed number and nature of the anticipated occupants;

14) Shall be in compliance with the Pennsylvania Department of Health, Department of Public Welfare, and Department of Mental Health standards applicable at the time of issue of license, and with the latest revision of licensing requirements. A license or certification shall be obtained from all appropriate governmental agencies prior to the issuance of an occupancy permit

DRAFT

15) A Certificate of Occupancy shall be required before any Unit may be occupied;

16) Any change in the conditions of original approval shall constitute a new use and the full procedure for obtaining approval of the conditional use shall be required.

MM. Hospital

1) The minimum site area required for a hospital shall be five acres;

2) The site shall be served by public water and public sewers;

3) Water pressure and volume shall be adequate for fire protection;

4) Ingress, egress, and internal traffic circulation shall be designed to ensure access by emergency vehicles;

5) The parking and circulation plan shall be referred to the Volunteer Fire Company for comments regarding traffic safety and emergency access;

6) A buffer yard shall be provided in accordance with the requirements of §808 of this Ordinance;

7) All mechanical equipment shall be screened from the view of adjoining properties;

8) All waste collection/storage areas shall be located at least fifty (50) feet from the nearest building and shall be enclosed by a solid masonry screen wall;

9) A private use helipad, if proposed as part of the hospital, shall meet the standards of §504.II of this chapter; and

10) The site shall be served by a collector road or arterial road.

NN. Hotel / Motel

1) No motel or hotel shall have a lot area less than 50,000 square feet or a lot area per sleeping unit of less than 1,000 square feet;

2) All waste collection/storage areas shall be located at least fifty (50) feet from the nearest building and shall be enclosed by a solid masonry screen wall;

3) All mechanical equipment shall be screened from the view of adjoining properties;

4) A landscaped strip shall screen all property lines, which adjoin residential uses or residential zoning districts, at least fifty (50) feet in depth, which shall be comprised of a combination of high level and low-level plantings. Such screening shall be a minimum of six (6) feet in height for high level and two (2) feet in height for low level plants at the time of installation. Existing vegetation shall be used to meet these criteria at the discretion of the Municipality;

5) Front, side and rear yards of a motel and hotel shall be permanently landscaped and maintained in good condition; and

6) Each motel or hotel sleeping unit shall have a minimum floor area of 400 square feet and shall contain no more than two bedrooms.

DRAFT

OO. Hydronic Heaters ADD DEFINITION AND TO USE CHART SHOULD THIS BE A CONDITIONAL USE OR MOVED TO SUPPLEMENTAL REGULATIONS SECTION??

1) Outdoor hydronic heaters, also known as outdoor wood-fired boilers, shall be permitted as an accessory use on lots that are one (1) acre or larger. All outdoor hydronic heaters shall comply with the regulations of this section. It shall be the landowner and/or applicant's responsibility to prove compliance with this section, this shall include the requirements of submitting manufacturer's specifications and maintenance documents, certification testing results, and any other required documents at the time of application for a building/zoning permit;

2) The regulations listed below shall not apply to the following:

    a) Grilling or cooking using charcoal, wood, propane or natural gas in cooking or grilling appliances;

    b) Approved outdoor recreational fires;

    c) Burning in a stove, furnace, fireplace, or other heating device within a building used for human or animal habitation; and

    d) The legal use of propane, acetylene, natural gas, gasoline or kerosene in a device intended for heating, construction or maintenance activitity.

3) The following items shall not be burned in an outdoor hydronic heater:

    a) Treated or painted wood; furniture, trash, rubbish or garbage, tires, lawn clippings, woody yard wastes, plastic materials, rubber materials, waste petroleum products, paints and paint thinners, chemicals, hazardous wastes, coal, paper wastes, construction or demolition debris, plywood, particleboard, manure, animal carcasses.

4) Fuel requirements for outdoor hydronic heaters; the materials listed below shall be the only materials allowed to be used for fuel:

    a) Clean wood, corn, wood pellets made from a clean wood, home heating oil, natural gas, or propane that complies with all applicable sulfur limits and is used as a starter or supplemental fuel for dual-fired outdoor hydronic heaters or any other materials located in a manufacturers list of specifications so long as the material is not prohibited by the previous section.

5) Any outdoor hydronic heater shall be located on the same parcel or plot of land of record in which the principal use is located with the exception that power lines or any related equipment to the outdoor hydronic heater may be located on an adjoining parcel or plot of land of record provided it will comply with all applicable virtual net metering laws of a public utility provider;

6) No more than one outdoor hydronic heater shall be permitted per lot;

DRAFT

7) Outdoor hydronic heaters shall meet the certification standards of the voluntary program of the Environmental Protection Agency (EPA) for Phase 2 air emission levels of no more than 0.32 pounds of fine particulates per million British Thermal Units (BTU's) heat input and any amendments or modifications made hereafter;

8) Setback requirements:

   a) Outdoor hydronic heaters shall be located a minimum of 150 feet from any side or rear property line;

   b) No outdoor hydronic heater shall be located between the principal structure on the property and the public street right-of-way; notwithstanding the aforesaid requirement, the minimum setback from the ultimate public street right-of-way shall be no less than 150 feet;

   c) If an outdoor hydronic heater is proposed to be located within 100 feet of any Historic Structure as may be designated by the Borough or determined to be eligible for listing on the National Register of Historic Places by the Pennsylvania Historical and Museum Commission or the National Park Service, such outdoor hydronic heater shall be subject to conditional use approval at the sole discretion of the Borough upon a finding that the proposed system will not adversely impact the historical significance or landscape context of the subject Historic Structure or Historic Resource;

9) No person shall install an outdoor hydronic heater unless it has a permanent attached stack with a minimum stack height of 10 feet above the ground that also extends at least two feet above the highest peak of any residence located less than 150 feet from the outdoor hydronic heater;

10) No signage or any form of advertising shall be utilized or attached to an outdoor solid-fuel fired boiler. This requirement shall not include the make and model description of the outdoor hydronic heater, manufacturers required hangtags or warning signs, the hangtags indicating EPA air quality specifications, or other signage that is required by law;

11) No person shall use or operate a new or existing outdoor wood-fired boiler between the dates of May 1 and September 30;

12) All outdoor hydronic heaters shall be installed, operated and maintained in strict compliance with all emissions of air quality standards promulgated by EPA, the DEP, or other relevant state or federal agency including emissions of dust and particulates;

13) In the event that an outdoor hydronic heater is damaged or it is physically deteriorated or decayed to the point where it no longer is compliant with this section, said heater must be removed and/or replaced with a new unit within 60 days of the date that notice is received from the Zoning Officer. In the event of replacement, all provisions of this chapter in effect at the time of replacement shall be complied with;

DRAFT

14) In the event the outdoor hydronic heater is abandoned, the boiler, electrical wires, and any related equipment and structures shall be dismantled and removed from the property within 60 days of the date it was abandoned; and

15) Outdoor hydronic heaters shall comply with all applicable regulations of the Uniform Construction Code.

PP. Impoundments SEE OIL AND GAS AND INJECTION WELL SECTIONS FOR ADDITIONAL REQUIREMENTS/REGULATIONS (**THIS SECTION was OUT OF ALPHBETICAL ORDER)**

1) Impoundments shall be permitted only on the parcel/property where the drilling site is located, and shall be considered an accessory use;

2) The minimum setback distance from all Protected Structures shall be 500' ~~one thousand two hundred (1,200) OR 1,500' feet~~;?? FROM THE EDGE OF THE IMPOUNDMENT

3) No off-site impoundments, drill cutting pits or reserve pits shall be permitted;

4) Impoundments shall not use surface aerators;

5) All drill site impoundments shall be secured with a temporary fence with a secured gate as follows:

a) The fence shall be of chain-link design, minimum 11 gauge thickness and be at least eight (8) feet high topped with either razor or barbed wire;

b) The fence shall remain in place at all times until the impoundment is removed;

c) Impoundments shall comply with all state and federal laws in regard to leak detection and monitoring, and must comply with EPA 9090 or any superseding regulation;

d) An impoundment may not contain any liquid substance generated from any well(s) located on another property;

e) No impoundment shall hold more than one million (1,000,000) gallons of liquid;

f) An impoundment must be completely enclosed, with solid walls and a roof;

g) As part of its PPC plan, an operator shall provide the details for emergencies involving impoundments; and

h) An applicant shall provide the Municipality with a baseline hydro-geologic study to document baseline quality.

QQ. Injection Well (Also reference Oil and Gas, Impoundments, Natural Gas Compressor Stations sections)

DRAFT

1) Conditional Use Application: A person or entity desiring approval of a conditional use application pursuant to this Section shall submit a written application in a form to be prescribed by the Municipality. Before submitting the application, the applicant is strongly encouraged to meet with the Zoning Officer to determine the requirements of and the procedural steps for the application. The intent of this process is for the applicant to obtain necessary information and guidance before entering into any commitments or incurring substantial expenses with regard to the site and plan preparation. The application shall not be considered to be complete and properly filed unless and until all items required by this Section, including the application fee, have been received. Such application shall include the following information and plans:

    a) Payment of an application fee in an amount to be determined from time to time by the Municipal Council as adopted by a Fee Resolution. Said fee shall also include a requirement to deposit escrow funds to be drawn from by the Municipality for reimbursement of administrative and engineering and other professional fees associated with review and inspections to ensure compliance with the Ordinance. The Municipality may adjust the escrow amount from time to time as may reasonably be required.

    b) Fifteen (15) paper copies and one (1) electronic copy of the completed application form supplied by the Municipality along with supporting documentation as identified in this Section.

    c) Written permission from the property owner(s) who has legal or equitable title in and to the proposed development or facility or demonstrable documentation of the applicant's authority to occupy the property.

    d) The GPS location and 911 address of the Well Site.

    e) Copies of any and all permits and applications submitted to all applicable local, county, state and federal agencies. Permits and plans shall include but not be limited to the Pennsylvania DEP well applications and permit, Erosion and Sediment Control General Permit-2, or current permit requirement, and all other required erosion and sedimentation, air, water and waste management permits.

    f) A site plan prepared by an engineer or surveyor licensed in Pennsylvania shall be provided to establish compliance with all applicable regulations. All drilling and production operations, including derricks, vacuum pumps, compressors, storage tanks, vehicle parking, structures, machinery, temporary housing, ponds and pits, and ancillary equipment on the well site shall be identified. All protected structures within 1,500 feet of the property lines of the well site shall be identified. All roads related to the development or facility must also be shown. A sufficient number of copies of the site plan shall be provided for review and comment by all Municipal emergency service organizations.

    g) The applicant shall provide a sufficient number of copies to the Municipality of the preparedness, prevention and contingency ("PPC") plan as defined in the PADEP document, "Guidelines for the Development and Implementation of Environmental Emergency

DRAFT

Response Plans," or the most recent applicable guidance document, to be distributed to the Municipal Manager, the Emergency Management Coordinator, the Fire Chief, and any other emergency service providers for the Municipality.

h) Environmental Impact Analysis. To the extent that the same is not otherwise included or provided within copies of applications for permits from the Commonwealth of Pennsylvania or other governmental units and herewith submitted or where no such permit is required, the applicant shall provide an environmental impact analysis. The environmental impact analysis shall describe, identify and analyze all environmental aspects of the site and of neighboring properties that may be affected by the proposed operations or the ultimate use proposed to be conducted on the site. The limits of the impact area to be studied shall be reviewed and approved by the Municipal Council. The environmental impact study shall include, but not be limited to, all critical impact areas on or off- site that may be impacted by the proposed or ultimate use of the facility, including the impact on the critical areas, the protective measures and procedures to protect the critical areas from damage, and the actions to be taken to minimize environmental damage to the critical areas on the site and surrounding areas during and after completion of the operation. Critical impact areas include, but are not limited to stream corridors; streams; wetlands; slopes in excess of twenty-five (25%) percent; sites where there is a history of adverse subsurface conditions or where available soils information or other geotechnical data, including data from the Bureau of Mines indicates the potential for landslides, subsidence or other subsurface hazards; Class I agricultural lands; highly acidic or erodible soils; carbonate or highly fractured bedrock; aquifer recharge and discharge areas; areas of unique or protected vegetation, wildlife habitat, and areas of historic, cultural and/or archaeological significance.

i) The applicant shall provide any and all waivers from owners of protected structures.

j) Scheduling. The applicant shall provide a schedule with the application indicating the anticipated beginning and ending dates for all proposed activities.

k) Insurance. Applicant shall furnish to the Municipality a Certificate of Liability Insurance naming the Municipality as an additional insured with respect to operations conducted within the Municipality, showing proof of liability insurance covering commercial, personal injury, and general liability in amounts not less than $25,000,000 per occurrence. The applicant shall fully defend, protect, indemnify, and hold harmless the Municipality, its departments, agents, officers, employees, or volunteers from and against such and every claim, except for those claims relating to any negligent, willful or intentional acts of the Municipality, its department, agents, officers, employees, or volunteers. The insurance coverage may consist of a combination of self-insurance, excess coverage, and umbrella coverage.

2) Conditional use approval is non-transferrable without consent from Municipal Council and shall automatically terminate, unless extended, if operations have

DRAFT

not commenced within one (1) year from the date of issuance of the approval. The conditional use approval may be extended by the Municipal Council upon written request by the operator, after notice and hearing. The operator shall provide proof that the requested conditional use permit for such location has not changed and that the operator meets all applicable criteria contained in this Section.

3) General Standards.

a) Best management practices for oil and gas operations shall be followed.

b) The uses regulated by this Section are determined to be land developments and subject to the applicable provisions of the Municipality's SALDO, as it may be amended.

c) Any hazardous or toxic material shall be securely contained, stored and removed in accordance with applicable state or Federal regulations. On-site disposal is prohibited. All hazardous materials stored must be clearly marked, identifying the contents, chemicals, and hazards as required by the OSHA Hazard Communication Standard 29 CFR 1910.1200 and National Fire Protection Association ("NFPA") Code 104 - Standard System for the identification of the Hazards of Materials for Emergency Response. All regulated tanks are to be labeled to a NFPA specification.

d) Fracture fluid storage ponds, open pits, and reserve pits are highly discouraged. Closed-loop systems and other related best management practices, including but not limited to the use of netting over fracture fluid ponds, shall be used during the drilling or completion of any well.

e) Fresh water storage ponds are permitted. The use of non-potable water is strongly encouraged.

f) All operations shall be in accordance with applicable Federal laws and regulations, the Pennsylvania Oil and Gas Act (58 P.S. §§ 601.101 et seq.), as amended, and pursuant to all other applicable rules, regulations, and procedures adopted pursuant thereto.

g) The operator shall be responsible for prevention and prompt removal of spills involving waste materials, oil, and toxic or hazardous materials.

h) Changes in the site plan, including but not limited to any expansion of the ground surface area used and/or devoted towards drilling operations, requires a new conditional use approval pursuant to the terms and conditions of this Section of the Ordinance.

i) At least thirty (30) days prior to any development activity at the development or facility, the operator shall provide the following information to each property owner within 4,000 feet of the planned surface location of the development or facility.

~~i)~~j)

i. A copy of the site plan submitted as part of the conditional use application;

ii. A general description of the planned operations at the development or facility and associated equipment to be used;

iii. The contact information for the operator; and

~~iv.~~ The availability of the operator to hold a meeting locally with such residents to present the operator's plans for the development or facility and to allow for questions and answers. The meeting(s) shall be held prior to the commencement of development activity.

k) A duly authorized representative of the Municipality, trained by the operator or agents of the operator, shall have the authority in relation to the enforcement of this Section to enter upon the property of a development or facility for the purpose of inspecting the equipment and all other aspects of the site necessary to assure compliance with this Section.

~~j)~~l) The operator of any development or facility shall notify the Emergency Management Coordinator, Municipal Manager and Municipal Engineer no less than ninety (90) days prior to the startup and abandonment or shutdown of any well site.

4) Setbacks/Location.

a) Injection wells shall comply with all screening and bufferyard requirements of the zoning district in which the pad/well is located.

b) In construction of the injection well, the natural surroundings should be considered and attempts made to minimize impacts to adjacent properties.

~~c)~~ The wellhead of an injection well shall be located not less than 500' ~~1,200~~ feet from any protected structure. The minimum setback distance from all Protected Structures shall be 500' ~~one thousand two hundred (1,200) feet;~~ FROM THE CENTER OF THE WELL PAD ~~OR EDGE OF PROPERTY BOUNDARY????~~

d) All injection well operations and the well pad, including but not limited to derricks, vacuum pumps, compressors, storage tanks, vehicle parking, structures, machinery, ponds, pits, and ancillary equipment, shall be located not less than 500 feet ~~(or 1,200' ???~~ from the nearest property line

5) Traffic Impact

a) Traffic Study:

i. A description of plans for the transportation and delivery of equipment, machinery, water, chemicals, products, materials and other items to be utilized in the siting, drilling, stimulating, completion, alteration and operation of the development or facility. Such description shall include a map showing the planned vehicular access roads and the transportation infrastructure being proposed

DRAFT

and the type, weight, number of trucks and delivery schedule necessary to support each phase of the development.

ii. An inventory, analysis and evaluation of existing road conditions on Municipal roads along the proposed transportation route identified by the application, including photography, video and core boring as determined to be necessary by the Municipal engineer(s).

b) The proposed routes must be designed to minimize the impact on streets within the Municipality. The Municipality reserves the right to designate alternate routes in the event that the applicant's proposed routes are deemed inadequate, unsafe or overly disruptive to normal vehicular traffic by the Municipality. Vehicles are to operate on state roads and may only use municipal roads when the use of state roads is not feasible. The operator shall coordinate truck routes with the school bus schedule so as to minimize interference with transportation of students to and from school.

c) Prior to the commencement of any activity at the development or facility, the operator shall enter into a municipal roadway maintenance and repair agreement with the Municipality, in a form acceptable to the Municipality, regarding maintenance, repair and bonding of municipal roads that are to be used by vehicles for development activities. The applicant shall take all necessary corrective action and measures as directed by the Municipality pursuant to the agreement to ensure the roadways are repaired and maintained during and at the conclusion of all development activities.

d) The operator shall take the necessary safeguards to ensure that the municipal roads utilized remain free of dirt, mud, and debris resulting from development activities and/or shall ensure such roads are promptly swept and cleaned if dirt, mud, and debris occur.

e) The operator shall take all necessary precautions to ensure the safety of persons in areas established for road crossing and or/adjacent to roadways (for example, persons waiting for public or school transportation). Where necessary and allowed, during periods of anticipated heavy or frequent truck traffic associated with the development of the facility, the operator will provide flagmen to ensure the public safety and include adequate signs and/or other warning measures for truck traffic and vehicular traffic.

f) There will be no staging of trucks or equipment on local roads.

g) A traffic control plan in conformance with PennDOT standards shall be provided.

6) Geologic

e) Geological Study. To the extent that the same is not otherwise included or provided within copies of applications for permits from the Commonwealth of Pennsylvania or other governmental units and herewith submitted or where no such permit is required, the applicant shall provide a Geological Study. The Study shall be prepared by experts acceptable to the Municipality and submitted with the application

DRAFT

and shall include an analysis of the existing geological formations in and surrounding the proposed site. This report shall contain the sources of the information, the data and background tests that were conducted and the conclusions and recommendations of the professionals preparing the report regarding the potential geological impact of the proposed use.

f) Pre-Development and Post-Development Soil Testing. Prior to beginning any injection well development activities, the operator shall be responsible for testing soil conditions within 300 feet of each well site. The purpose of testing is to determine the baseline soil conditions surrounding the proposed well site and address resultant changes that may occur or have an impact on the soils of the site and surrounding area.

i. Pre-drilling testing results shall be submitted as part of the Conditional Use application.

ii. Post-development testing shall be completed twelve (12) months after operations have begun.

iii. The results shall be submitted to the Municipality and PA DEP within ten (10) days of their receipt.

iv. The operator shall be responsible for all costs associated with testing and testing shall be done by an independent state-certified testing laboratory agreed upon by the Municipality.

7) Visual.

a) The injection well facility shall be located, designed and constructed to minimize the removal of trees and shrubs, protect all natural resources, and minimize the amount of surface disturbance.

b) The operator shall not clear brush or trees by way of burning and shall chip, grind, or remove all tree stumps from properties it clears for development purposes.

c) The location and design of structures and site improvements shall be integrated with the natural color, form, and texture of the surrounding area.

7) Lighting.

a. Lighting at an injection well and well pad shall, when practicable, be limited to security lighting.

b. All temporary outdoor lighting shall be shielded and/or reflected away from adjoining properties so that no direct beam of light, but only diffuse or reflected light, enters adjoining properties.

c. No site lighting used for or associated with well site construction, drilling operations or post-drilling production shall be positioned in a manner such that it shines directly on public roads, protected structures, or any property within 3,000 feet of the well site. Site lighting must be directed

DRAFT

downward and shielded to prevent glare on public roads and adjacent properties.

8) Air and Water Quality.

g) Air Quality Study. To the extent that the same is not otherwise included or provided within copies of applications for permits from the Commonwealth of Pennsylvania or other governmental units and herewith submitted or where no such permit is required, the applicant shall provide an Air Quality Study. The Study shall be prepared by experts acceptable to the Municipality and submitted with the application and shall include an analysis of the existing and predicted air quality levels, including smoke, odors, fumes, dust, and pollutants at the site. This report shall contain the sources of the information, the data and background tests that were conducted and the conclusions and recommendations of the professionals preparing the report that would be required to maintain the air quality at a level equal to or better than the existing background level prior to the proposed use; or the applicant/developer shall submit a statement prepared by an engineer warranting that the nature of the use will produce no impact on air quality.

a. Air-contaminant emissions shall be compliant with all municipal, county, state, and federal regulations, including, without limitation, the provisions of this Ordinance, as amended, and all applicable regulations for smoke, ash, dust, fumes, gases, odors, and vapors.

b. The operator shall take the necessary safeguards to ensure appropriate dust- control measures are in place to prevent visible plumes of dust from crossing the property line or adversely impacting neighboring properties.

c. Sixty (60) days prior to start of operations, the operator shall notify residents with water wells within 4,000 feet of the injection well of its intentions to begin operations. The operator shall provide proof of notice to the Municipality.

d. All condensate tanks, compressor stations, processing plants, and other facilities shall be equipped with vapor recovery and/or vapor destruction units.

e. Hydrological Study. To the extent that the same is not otherwise included or provided within copies of applications for permits from the Commonwealth of Pennsylvania or other governmental units, and herewith submitted or where no such permit is required, the applicant shall provide a hydrological study. The study shall be prepared by a hydrogeologist acceptable to the Municipality. The study shall evaluate the existing surface and subsurface hydrogeology, based upon historical data and on-site investigation and studies. The study shall identify groundwater discharge and recharge areas that may be affected by the proposed use, map the groundwater table and analyze and delineate the effects of the proposed use on the hydrology, including surface and ground water quantity and quality. Acceptance of the study is subject to

DRAFT

final approval by the Municipal Council. If the study shows an alteration to the groundwater, the application shall be denied.

9) Noise. The operator shall take the following steps to minimize, to the extent possible, noise resulting from the injection well development:

a. Prior to development, the operator shall establish a continuous seventy-two (72) hour ambient noise level at the nearest property line of a residence or public building, school, medical, emergency or other public residence or public facility, or 100 feet from the nearest residence or public building, school, medical, emergency or other public residence or public facility, whichever point is closer to the affected facility. In lieu of establishing the above seventy-two (72) hour ambient noise level, the operator may assume and use, for the purposes of compliance with this Ordinance, a default ambient noise level of fifty-five (55) decibels (dBa). The sound level meter used in conducting any evaluation shall meet the ANSI's standard for sound meters or an instrument and the associated recording and analyzing equipment which will provide equivalent data.

b. Noise Management Plan:

i. An acoustics study shall be prepared and submitted with the application. The study shall be prepared by an acoustics expert(s) acceptable to the Municipality. The study shall identify the existing background level of noise and the anticipated noise impact from the proposed use. The report shall contain measures of existing ambient measurements, estimates of the noise measurements to be anticipated from the type of operations and equipment that are proposed for the use and if there are any significant increases in those noise levels. The report shall also contain specific proposals that are intended to reduce noise levels emanating off the site.

ii. The study shall be based upon actual sound level measurements and estimates of potential noise impact at the property lines of the site of the proposed use; or the applicant/developer shall submit a statement prepared by an engineer warranting that the nature of the use will produce no impact on acoustics, in regard to the standards of this Section.

c. The operator shall provide documentation of any established, seventy-two (72) hour evaluation, relied upon to establish an ambient noise level greater than fifty- five (55) decibels (dBa), to the Zoning Officer within three (3) business days of such a request.

d. The noise generated during operating hours shall not exceed the average ambient noise level by more than ten (10) decibels (dBa) or default level, whichever is higher.

e. All permanent facilities associated with the injection well and well pad shall meet the general noise requirements of this Ordinance. Where a conflict exists the more stringent requirements shall apply.

DRAFT

f. Injection wells/pads or facilities performing the equivalent functions shall be constructed so as to mitigate sound levels or have installed mitigation devices to mitigate sound levels so as to prevent such activity from being a nuisance to nearby residential or public buildings, medical, emergency, or other public facilities.

i. Effective sound mitigation devices shall be installed to permanent facilities to address sound levels that would otherwise exceed the noise level standards.

g. If a complaint is received by the Municipality regarding noise generated during construction or operation of the facility the operator shall, within twenty-four (24) hours following receipt of notification, begin continuous monitoring for a period of forty-eight (48) hours at the nearest property line to the complainant's residential or public building or 100 feet from the complainant's residential or public building, school, medical, emergency, or other public facilities, whichever is closer. The applicant shall report the findings to the Municipality and shall mitigate the problem to the allowable level if the noise level exceeds the allowable rate.

10) Hazards.

a. Upon request of the Emergency Management Coordinator, the operator shall, prior to start of operations, make available with at least thirty (30) days' notice, at the applicant's sole cost and expense, an appropriate group training program for emergency responders and Municipality code enforcement personnel. Such training shall be made available at least annually during any year that the injection well is in operation. Training should cover each phase of the development from site work to well completion. The Municipality shall require a minimum of four (4) hours of annual training, with additional hours added at the recommendation of the Fire Chief annually. If additional wells are drilled at the site, the operator and Emergency Management Coordinator will determine if additional training is required.

b. The applicant shall maintain at the property and on file with the municipality a current list and the Material Safety Data Sheets ("MSDS") for all chemicals used in the drilling operations (including but not limited to types of additives, acids, polymers, salts, surfactants and solvents) and in any fracturing operations. If the PPC requires availability and/or utilization of special equipment or supplies particular to the hazards or conditions addressed in the PPC, the Municipality shall require the operator to reimburse the Municipality for the cost of procurement of such special equipment or supplies.

11) Access.

a. Beginning with its intersection with a public street, any ingress or egress point for the development or facility shall be paved for the first fifty (50) feet and improved with limestone or other material for the next 100 feet in a manner that no water, sediment, or debris will be carried onto any public street. If any amount of mud, dirt or other debris is carried onto public or private ROW from the well site, the operator shall immediately

DRAFT

clean the roads and implement a remedial plan as directed by the Municipality to keep the streets continuously clean.

i. The first fifty (50) feet from the existing edge of pavement extending into the site shall consist of the following material:

1. Compacted subgrade.

2. PennDOT Class 4 geotextile fabric.

3. Eight (8) inches of AASHTO No. 1 crushed aggregate base course.

4. Two (2) inches of PennDOT 2A aggregate.

5. Six (6) inches of superpave 25 mm binder course.

ii. The remainder of the driveway to the well pad shall be constructed with the following material:

1. Eight (8) inches of AASHTO No. 1 crushed aggregate base course.

2. Two (2) inches of PennDOT 2A aggregate.

b. Ingress and egress points for all public and private driveways or roadways shall be located and improved in order to:

i. Meet Pennsylvania Code 67, Chapter 441, Access to and Occupancy of Highways by Driveway and Local Roads, PennDOT Design Manual 2.

ii. Ensure adequate capacity for existing and projected traffic volume.

iii. Provide efficient movement of traffic, including appropriate turning radii and transition grade.

iv. Minimize hazards to highway users and adjacent property and human activity.

c. All applicable permits or approvals must be obtained, including, without limitation:

i. Access or driveway permits to state or county roads.

ii. Overweight or oversize loads.

12) Storage of Equipment.

a. No equipment, including drilling, re-drilling, re-working, or other portable equipment, shall be stored on the development or facility which is not essential to the everyday operation of the development or facility. This includes the removal of idle equipment unnecessary for the operation of wells.

DRAFT

b. Lumber, pipes, tubing and casing shall not be left on the development or facility except when drilling or well-servicing operations are being conducted on the site.

c. It shall be illegal to park or store any vehicle or item of machinery on any street, ROW or in any driveway, alley or on the development or facility which constitutes a fire hazard or an obstruction to or interference with fighting or controlling fires, except that equipment which is necessary for the maintenance of the development or facility or for the gathering or transporting of hydrocarbon substances from the site.

13) Fencing.

a. Security fencing consisting of a permanent galvanized chain-link fence, a minimum of eight (8) feet in height, topped with either razor or barbed wire shall be installed prior to the commencement of any activity at every well site to secure wellheads, storage tanks, separation facilities, water or liquid impoundment areas, and other mechanical and production equipment and structures on the well site. SEE IMPOUNDMENTS SECTIN FOR ADDITIONAL REQUIREMENTS/REGULATIONS

b. Security fencing shall be equipped with lockable gates at every access point, and having openings no less than twelve (12) feet wide. Gates shall be kept locked except when being used for access to the site. Additional lockable gates used to access the well site, freshwater ponds or open pits by foot may be allowed, as necessary. The fence posts shall be set in concrete at sufficient depths to maintain the stability of the fence.

c. The Municipality's first responders shall be given means to access the well site in case of an emergency via lock box or a Municipality-approved equivalent. The applicant must provide the Allegheny County 911 Communications Center with necessary information to access the development or facility in case of an emergency.

d. Warning signs shall be placed on the fencing surrounding the development or facility, providing notice of the potential dangers and the contact information in case of an emergency.

14) Structure Height. Permanent structures of the injection well developments and facilities (both principal and accessory) shall comply with the height regulations of the applicable zoning district.

RR. Major Excavation

1) The proposed operation shall meet all requirements of the Municipal Land Disturbance Ordinance;

2) Residential streets shall not be used for routing of vehicles serving the excavation or fill unless the applicant demonstrates there is no other option;

3) A bond shall be provided for all affected roads in a form and manner acceptable to the Municipality;

DRAFT

4) The applicant shall submit a plan that addresses the number of vehicles that will access the site and the routes the vehicles will travel in a form acceptable to the Municipality; and

5) Major excavation shall comply with all pertinent sedimentation and erosion control regulations, and shall not endanger structures or other improvements on any adjacent property. No extraction of oil, gas, coal, or other minerals shall be conducted within the distances established in section MMM. Oil and Gas Development to a residential use or principal structure. Excavation of sand, rock, metal and other natural resources shall be permitted as a conditional use only in the "S" District.

6) Hours of operation shall be limited to between 7:00 a.m. to 7:00 p.m.

e) Manufacturing

1) A traffic impact study shall be required;

2) A bond shall be provided for all affected roads in a form and manner acceptable to the Municipality;

3) A landscaped strip shall screen all property lines, which adjoin residential uses or residential zoning districts, at least fifty (50) feet in depth, which shall be comprised of a combination of high level and low-level plantings. Such screening shall be a minimum of six (6) feet in height for high level and two (2) feet in height for low level plants at the time of installation. Existing vegetation shall be used to meet these criteria at the discretion of the Municipality;

4) No direct beams or rays of light from exterior lighting fixtures, signs or vehicles maneuvering on the development site, shall be permitted to shine into the private living areas and associated open spaces of adjacent residential properties;

5) All mechanical equipment shall be screened from the view of adjoining properties;

6) Shall be located on lots with a minimum of five (5) acres in size; shall have side and rear yards of not less than twenty (20) feet when abutting non-residential zoning districts, and fifty (50) feet when abutting any R or S zoning district;

7) All waste collection/storage areas shall be located at least fifty (50) feet from the nearest building and shall be enclosed by a solid masonry screen wall;

8) Outdoor speakers shall be permitted for emergency announcements only;

9) The Municipality may impose restrictions on access to the facility, storage of vehicles or materials on the premises, hours of operation and other such matters as they deem necessary to ensure that there is no adverse impact upon the functioning of the district or adjacent parcels; and

10) Outdoor storage of materials or equipment, other than maintenance vehicles, shall be permitted only if the storage area is completely enclosed by a minimum eight (8)-foot fence with locking gate and is screened by one-hundred-percent (100%) opaque screening material placed in the fencing or by a six (6)-foot dense, compact evergreen hedge, or as determined by the Municipality as adequate to

DRAFT

ensure the protection of adjacent residential properties considering topography and sight lines. Material storage area shall be a dust-free, all-weather surface such as asphalt, concrete or compacted gravel.

f) Medical Marijuana Dispensary

1) No person shall conduct, engage in, or operate in any manner a medical marijuana facility, a cigar bar, a consumption lounge, or a hookah bar within the Municipality without having first obtained a business license from the Monroeville Tax Office;

2) The business license, as provided for in this article, shall be prominently displayed on the premises of the medical marijuana facility;

3) Any license issued pursuant to this section is non-transferable to another person, entity, location or premises, medical marijuana establishment;

4) No medical marijuana facility shall be operated within the Municipality unless the business possesses a valid license issued by the Commonwealth of Pennsylvania to do so, and all standards as established by the Commonwealth are complied with

5) Upon suspension or revocation of the license issued by Commonwealth of Pennsylvania, the business license issued by the building and Engineering Department shall be empowered to immediately suspend or revoke the Municipal issued business license until such a time as the Commonwealth of Pennsylvania can adjudicate the issue with the state-level permit

6) If a business fails to renew an existing business license operating in the Municipal limits, the Municipality shall immediately report such infraction to the Commonwealth of Pennsylvania Medical Marijuana Authority

7) The location of the medical marijuana facility shall meet all County and Commonwealth operating requirements;

8) A traffic impact study shall be required;

9) The site shall have frontage on and direct vehicular access to a public road;

10) A medical marijuana dispensary shall be a minimum distance of 1,000 feet from the next nearest clinic. This does not include complementing or supporting businesses covered by different definitions. This distance shall be measured in a straight line from the closest exterior walls of the buildings or portions thereof in which the businesses are conducted or proposed to be conducted, regardless of the municipality in which it is located;

11) Any facility dispensing medical marijuana must be legally registered in the commonwealth and possess a current valid medical marijuana permit from the Department of Health. Such a facility may only dispense medical marijuana in an indoor, enclosed, permanent and secure building and shall not be located in a trailer, cargo container, mobile or modular unit, mobile home, recreational vehicle or other motor vehicle;

DRAFT

12) Dispensaries shall have a single secure public entrance and shall implement appropriate security measures to deter and prevent the theft of controlled substances and unauthorized entrance into areas where they are stored;

13) An applicant for a business license for a medical marijuana facility shall submit an application to the Municipality, through the Building and Engineering Department, requiring the following information:
    a) Full name and address of the applicant;
    b) The location at which the proposed medical marijuana facility is to be operated;
    c) A floor plan of the establishment;
    d) A parking layout;

14) Upon applying for a business license for a medical marijuana facility, a cigar bar, a consumption lounge, or a hookah bar, the Building and Engineering Department shall investigate, or cause to be investigated, the proposed business location to determine:
    a) If building codes are complied with and report the findings in writing;
    b) If building codes concerning health and safety are complied with and report the findings in writing;
    c) If building codes concerning fire prevention and safety are complied with and report the findings in writing

15) Medical marijuana dispensaries shall be a maximum of 3,000 gross square feet, of which no more than 500 square feet shall be used for secure storage of product, and shall have an interior customer waiting area equal to a minimum of 25% of the gross floor area;

16) A medical marijuana dispensary shall:

    a) Not have a drive-through service;

    b) Not have outdoor seating areas;

    c) Not have outdoor vending machines;

    d) Prohibit the administering of or the consumption of medical marijuana on the premises; and

    e) Not offer direct or home delivery service.

17) A medical marijuana dispensary may dispense controlled substances only to certified patients and caregivers and shall comply with all lawful, applicable health regulations;

18) All waste collection/storage areas shall be located at least fifty (50) feet from the nearest building and shall be enclosed by a solid masonry screen wall;

19) All mechanical equipment shall be screened from the view of adjoining properties;

20) Medical Marijuana Dispensary shall not be established or operated within 1,000 (one thousand) feet or distance established by federal or state regulations (whichever distance is greater) of an existing School, Public playground, Public park, Day care or Nursery School, Place of Worship;

DRAFT

21) Any medical marijuana dispensary lawfully operating shall not be rendered in violation of these provisions by the subsequent location of a public, private or parochial school or a day-care facility;

22) A dispensary that provides medical marijuana may not operate on the same site as a facility used for growing and processing medical marijuana; and

23) Medical Marijuana Facilities shall be subject to the off-street parking requirements as specified in Article IX.

g) Medical Marijuana Growing Facility

1) Shall abide by all State and Federal Regulations;

2) All uses shall be conducted within a completely enclosed building and shall create no external visible sign of the operation, such as noise, smoke, vibration, or any other factor;

3) Grow facilities must be in an enclosed and secured facility with functional windows, doors, rigid or semi-rigid walls and a roof

4) Off-street parking, loading, and hours of operation shall be conducted in a manner that does not interfere with any industrial operations in the vicinity;

5) The operation shall have a comprehensive identification system that includes all employees' full legal name and photograph;

6) Non-Employee, non-customer visitors must hold and display an identification badge and log their time of arrival, departure, and purpose of visit in a record that's preserved for a period of three years;

7) A security alarm system that covers all points of entry and perimeter windows. Utilization of motion detectors, pressure switches, duress and panic buttons, and hold-up alarms;

8) A complete surveillance system that includes a storage device and internet protocol (IP) compatible. Technical requirements include a minimum resolution of 640 x 470 pixels, 10 frames a second recording rate, and 24-hour continuous operation. Furthermore, the storage device must be secured on-premises using a strong box or locked cabinet to prevent against tampering or theft. All video surveillance footage must be stored for a period of 45 days and accessible to law enforcement or state licensing officials upon request;

9) Video surveillance cameras should be positioned to achieve easy and uninhibited view of any person approaching or leaving the premises as well as within view of all POS areas, perimeter entrances/exits, grow facilities, processing rooms, and distribution areas. Furthermore, all cannabis products must be placed in a quarantined storage area for 24 hours prior to transportation to another licensed facility;

10) Cannabis producers and licensees must adhere to a strict product tracking system that ranges from seed to sale;

DRAFT

11) All mechanical equipment shall be screened from the view of adjoining properties;

12) All waste collection/storage areas shall be located at least fifty (50) feet from the nearest building and shall be enclosed by a solid masonry screen wall.

13) Shall meet all requirements as listed for §504.(A) *Agriculture Use;*

14) Fencing Shall be required, meeting the requirements of §807. Fence and Hedges.

h) Membership Club

1) Also see: *"Athletic Facility", "Day Spa", "Fitness Center", "Gymnasium", "Recreational Facility", "Sports Facility".*

2) A traffic impact study shall be required;

3) The site shall have frontage on and direct vehicular access to a public road;

4) The minimum required building setback from any property adjoining a residential use or a residential zoning district shall be fifty (50) feet;

5) The outdoor recreational area shall be setback fifty (50) feet from all property lines and surrounded with opaque fencing. The height of the fencing shall be subject to the regulations of §805.

6) Any membership club shall provide buffer yards in accordance with §810. Buffer yards;

7) Any membership club that includes a restaurant shall further be subject to the off-street parking requirements of Article IX, Off-Street Parking and Loading, for the portion of the building devoted to restaurant use;

8) Any membership club shall provide fencing to control pedestrian ingress and egress;

9) All mechanical equipment shall be screened from the view of adjoining properties;

10) All waste collection/storage areas shall be located at least fifty (50) feet from the nearest building and shall be enclosed by a solid masonry screen wall;

11) Any rental of the facility to non-members shall require on-site management and/or security personnel during the event; and

12) Any membership club that includes a restaurant shall meet the specific conditional use criteria for restaurant pursuant to §504.YYY.

i) Methadone Treatment Facility

1) See: *"Substance Abuse Treatment Facility."*

UU. Mobile Home Park

DRAFT

1) A traffic impact study shall be required;

2) The minimum site area shall be ten (10) acres;

3) Mobile home parks shall not be located in any identified floodplain area;

4) No part of any mobile home park shall be used for nonresidential purposes, except such uses that are required for the direct servicing and well-being of park residents' use and for the management and maintenance of the park;

5) Nothing contained in this section shall be deemed as prohibiting the sale of a mobile home located on a mobile home lot and connected to utilities;

6) No central toilet, washroom or laundry facilities and shall be constructed within the mobile home park;

7) individual Mobile Home Lots shall have an area of not less than three thousand (3,000) square feet with a minimum width of forty (40) feet and a minimum Lot Depth of seventy-five (75) feet;

8) The total number of Mobile Home Lots shall not exceed twelve (12) per acre;

9) Margins alongside the front, side and rear property line shall be densely planted with trees and shrubs for a depth of not less than twenty-five (25) feet;

10) Each Mobile Home shall have an entrance platform or Patio to conform to the overall plan;

11) Each Mobile Home Park shall provide sanitary services and conveniences including water supply, sewage disposal, Street lighting and garbage disposal;

12) Natural gas piping systems, when installed in mobile home parks, shall be maintained in conformity with accepted engineering practices and the standards and regulations of the gas company;

13) Each mobile home lot provided with piped gas shall have an approved shutoff valve installed upstream of the gas outlet. The outlet shall be equipped with an approved cap to prevent accidental discharge of gas when the outlet is not in use;

14) All mechanical equipment shall be screened from the view of adjoining properties;

15) All waste collection/storage areas shall be located at least fifty (50) feet from the nearest building and shall be enclosed by a solid masonry screen wall;

16) Liquefied petroleum gas systems provided for mobile homes, service buildings or other structures, when installed, shall be maintained in conformity with the rules and regulations of the authority having jurisdiction, including the National Fire Protection Association and the Building Officials and Code Administrators International, Inc., National Fire Prevention Code/1987, or as amended. These rules and regulations shall also include the following:

DRAFT

a) Systems shall be provided with safety devices to relieve excessive pressures and shall be arranged so that the discharge terminates at a safe location;

b) Systems shall have at least one accessible means for shutting off gas. Such means shall be located outside the mobile home and shall be maintained in effective operating condition;

c) Liquefied petroleum gas piping outside of the mobile homes shall be well supported and protected against mechanical injury. Undiluted liquefied petroleum gas in liquid form shall not be conveyed through piping equipment and systems in mobile homes;

d) Vessels of more than 12 and less than 60 US gallons gross capacity shall be securely, but not necessarily permanently, fastened to prevent accidental overturning; and

e) No liquefied petroleum gas vessel shall be stored or located inside or beneath any storage cabinet, carport, mobile home, or any other structure unless such installations are specially approved by the authority having jurisdiction.

17) Installation of fuel oil supply system:

a) All fuel oil supply systems provided for mobile homes, service buildings and other structures shall be installed and maintained in conformity with the rules and regulations of the authority having jurisdiction, including the National Fire Protection Association;

b) All piping from outside fuel-storage tanks or cylinders to mobile homes shall be securely, but not necessarily permanently, fastened in place; and

c) All fuel oil supply systems provided for mobile homes, service buildings and other structures shall have shutoff valves located within five inches of storage tanks.

18) Storage tanks:

a) All fuel storage tanks or cylinders shall be securely placed and shall not be less than five feet from any mobile home exit; and

b) Storage tanks located in areas subject to traffic shall be protected against physical damage.

VV. Motel

1) See: Hotel

WW. Multi-Family

1) See: Apartment; Condominium; Townhouse; Two Family Home

XX. Natural Gas Compressor Stations and Natural Gas Processing Plants (Also reference Oil and Gas, Injection Wells, Impoundments sections)

DRAFT

1) Compressor Stations

a) Compressor stations shall only be permitted on property that is a minimum of five (5) acres or larger. The applicant shall present evidence to confirm that the site selected will not unreasonably adversely affect:

i. Lawful existing or authorized uses of adjacent properties;

ii. Neighboring flood-prone or landslide-prone areas; and

iii. Agriculture and farmland.

b) A conditional use application for a compressor station shall be accompanied with written permission from the property owner(s) who has legal or equitable title in and to the surface of property;

c) Conditional use approval is non-transferrable without the consent from the Municipality of Monroeville, and shall automatically terminate, unless extended, if operations are not commenced within one (1) year from the date of the issuance of the permit for the conditional use;

d) As part of its conditional use application, the applicant shall provide the Municipality and its emergency responders with the name and 24-hour contact information of the individual who is supervising the operations. Applicant shall also provide similar contact information for all subcontractors, and shall be responsible for updated such a list as required;

e) All compressor stations shall be completely enclosed by a building that shall match or blend in with the architectural features of surrounding properties and the existing character of the area. The building shall be constructed of soundproof walls, and all equipment shall be enclosed within the building;

~~f)~~ The minimum setback distance from all Protected Structures shall be 500' ~~one thousand two hundred (1,200)~~ feet; FROM THE EDGE OF ANY MACHINERY OR EQUIPMENT ~~THE CENTER OF THE WELL PAD OR EDGE OF PROPERTY BOUNDARY????~~

g) Access directly to state roads shall require a Pennsylvania Department of Transportation (PENNDOT) highway occupancy permit prior to initiating any work at the drill site. The permit shall be provided to the Municipality. Access roads must be fifty (50) feet from adjacent property lines. The first one hundred fifty (150) feet of the access road from the public road to compressor stations must be paved. The remainder of the access road shall be constructed with a dust-resistant aggregate material, and shall provide for adequate control of stormwater runoff and erosion and sedimentation control;

h) The access road shall be gated to prevent unauthorized access to the site. The site 911 address shall be posted on a sign at the access gate, along with the name and 24-hour emergency contact phone number of the owner and operator of the compressor station;

DRAFT

i) The operator shall provide a plan for the transmission of oil, gas, water or other substances to and from the compressor station. The operator shall identify the location of gathering lines, compressors, and other mid and downstream facilities located in the Municipality and extending seven hundred fifty (750) feet beyond municipal boundaries. The operator shall provide the Municipality with all authorizations and permits proving operator's ability to operate the compressor station, pipelines and other equipment;

j) All noise generating equipment used at compressor stations shall be reduced using acoustical blankets, sound walls, mufflers and other acceptable noise suppressing methods. As part of the conditional use application and prior to commencing operations, the applicant shall establish the residual or background noise level baseline. The baseline shall be established over a seventy-two (72) hour period with at least one twenty-four (24) hour reading on a Saturday or Sunday. A noise consultant/engineer mutually agreed upon by the operator and the Municipality shall be responsible for performing the baseline tests at the applicant's sole cost and expense;

k) The noise generated during operations, when measured at the nearest protected structure property line or one hundred (100) feet from the nearest protected structure (as measured to the closest exterior point of the building), whichever is closer to the protected structure, shall not exceed the average ambient noise level as determined by the seventy-two (72) hour evaluation:

   i. During operations by more than ten (10) decibels during the hours of 7 AM to 9 PM; and

   ii. During operations by more than five (5) decibels during the hours of 9 PM to 7 AM.

l) All structures, including but not limited to pumping units, storage tanks, buildings and structures shall be painted a neutral color, compatible with the surrounding environment;

m) The Municipality reserves the right to impose additional conditions and safeguards necessary to protect the health, safety and welfare of its residents in the event of any unique circumstances or unintended consequences of the oil and gas operations in accordance with the Pennsylvania Municipalities Planning Code; and

n) The facility and/or its operations shall at all times comply with all applicable permits and requirements of the PADEP, the United States Environmental Protection Agency, and any other governmental authority having jurisdiction over its operations. The facility and operator shall also at all times comply with all federal, state and local laws, ordinances and regulations promulgated to protect the environment. The applicant shall demonstrate that the proposed operations do not violate the rights of the citizens of the Municipality pursuant to the Pennsylvania Environmental Rights Amendment.

DRAFT

2) Processing plants

a) Processing plants shall only be permitted on property that is a minimum of five (5) acres or larger. The applicant shall present evidence to confirm that the site selected will not unreasonably adversely affect:

i. Lawful existing or authorized uses of adjacent properties;

ii. Neighboring flood-prone or landslide-prone areas; and

iii. Agriculture and farmland.

b) A conditional use application for a compressor station shall be accompanied with written permission from the property owner(s) who has legal or equitable title in and to the surface of property;

c) Conditional use approval is non-transferrable without the consent from the Municipality of Monroeville, and shall automatically terminate, unless extended, if operations are not commenced within one (1) year from the date of the issuance of the permit for the conditional use;

d) As part of its conditional use application, the applicant shall provide the Municipality and its emergency responders with the name and 24-hour contact information of the individual who is supervising the operations. Applicant shall also provide similar contact information for all subcontractors, and shall be responsible for updated such a list as required;

e) Access directly to state roads shall require a Pennsylvania Department of Transportation (PENNDOT) highway occupancy permit prior to initiating any work at the drill site. The permit shall be provided to the Municipality. Access roads must be fifty (50) feet from adjacent property lines. The first one hundred fifty (150) feet of the access road from the public road to compressor stations must be paved. The remainder of the access road shall be constructed with a dust-resistant aggregate material, and shall provide for adequate control of stormwater runoff and erosion and sedimentation control;

f) The access road shall be gated to prevent unauthorized access to the site. The site 911 address shall be posted on a sign at the access gate, along with the name and 24-hour emergency contact phone number of the owner and operator of the processing plant;

g) The operator shall provide a plan for the transmission of oil, gas, water or other substances to and from the processing plant. The operator shall identify the location of gathering lines, compressors, and other mid and downstream facilities located in the Municipality and extending seven hundred fifty (750) feet beyond municipal boundaries. The operator shall provide the Municipality with all authorizations and permits proving operator's ability to operate the processing plant, pipelines and other equipment;

h) All noise generating equipment used at processing plants shall be reduced using acoustical blankets, sound walls, mufflers and other

DRAFT

acceptable noise suppressing methods. As part of the conditional use application and prior to commencing operations, the applicant shall establish the residual or background noise level baseline. The baseline shall be established over a seventy-two (72) hour period with at least one twenty-four (24) hour reading on a Saturday or Sunday. A noise consultant/engineer mutually agreed upon by the operator and the Municipality shall be responsible for performing the baseline tests at the applicant's sole cost and expense;

i) The noise generated during operations, when measured at the nearest protected structure property line or one hundred (100) feet from the nearest protected structure (as measured to the closest exterior point of the building), whichever is closer to the protected structure, shall not exceed the average ambient noise level as determined by the seventy-two (72) hour evaluation:

   i. During operations by more than ten (10) decibels during the hours of 7 AM to 9 PM; and

   ii. During operations by more than five (5) decibels during the hours of 9 PM to 7 AM.

j) All structures, including but not limited to pumping units, storage tanks, buildings and structures shall be painted a neutral color, compatible with the surrounding environment;

k) The Municipality reserves the right to impose additional conditions and safeguards necessary to protect the health, safety and welfare of its residents in the event of any unique circumstances or unintended consequences of the oil and gas operations in accordance with the Pennsylvania Municipalities Planning Code; and

l) The facility and/or its operations shall at all times comply with all applicable permits and requirements of the PADEP, the United States Environmental Protection Agency, and any other governmental authority having jurisdiction over its operations. The facility and operator shall also at all times comply with all federal, state and local laws, ordinances and regulations promulgated to protect the environment. The applicant shall demonstrate that the proposed operations do not violate the rights of the citizens of the Municipality pursuant to the Pennsylvania Environmental Rights Amendment.

YY. Night Club

1) A traffic impact study shall be required;

2) There shall be only one nightclub permitted on a single lot or parcel;

3) A nightclub shall be allowed (as a Conditional use) in the C-2, C-3 and BLVD Districts only;

4) A nightclub shall not be located within 100 feet from any parcel of land or lot used principally as a residential use;

DRAFT

5) A nightclub shall not create an enticement for minors because of its proximity to nearby uses where minors may congregate, including but not limited to schools, churches, or libraries;

6) A nightclub shall be located principally within an enclosed building that has its main entrance facing upon a public right of way and such entrance shall be the primary entrance used for the nightclub use. Outdoor areas used by a nightclub may only comprise an area equal to 10% of the indoor area used by the nightclub, and such outdoor area may only be used for dining purposes;

7) Nightclubs shall not utilize outdoor speakers or generate noise in excess of the limits otherwise permitted by this ordinance;

8) Where a nightclub is located within a multitenant facility, such as a shopping center, measurement shall occur from the boundary of the leasehold interest, instead of the property line;

9) All mechanical equipment shall be screened from the view of adjoining properties;

10) All waste collection/storage areas shall be located at least fifty (50) feet from the nearest building and shall be enclosed by a solid masonry screen wall;

11) The separation requirements hereof shall be measured in a straight line, without regard to intervening structures, from the closest point on each parcel;

12) Hours of operation. A nightclub may be open for business no longer than on Mondays through Thursdays from 10:00 a.m. to 12:00 midnight; on Fridays and Saturdays from 10:00 a.m. to 2:00 a.m. (the following day); and on Sundays from 10:00 a.m. to 10:00 p.m.. Such hours of operation may be further limited or restricted (as an additional condition) upon a finding that such is reasonable and necessary due to the proximity of the nightclub to adjacent uses; and

13) A proposed night club must demonstrate specific compliance with the regulations concerning fire protection; lighting; noise limitations; odors; off-street parking; and off-street loading, all as required by this ordinance.

ZZ. Nursing Home Facility *Also see: "Assisted Living Facility" ,"Continuing Care Facility", "Hospice", "Personal Care Home facility", "Skilled Nursing Facility".*

1) A traffic impact study shall be required;

2) A Nursing Home Facility shall be located on property, which consists of one or more Lots and contains a minimum of one (1) acre. If more than one Lot or parcel is used, they must be contiguous. Nursing Home facilities occupying more than one Lot or parcel shall obtain Subdivision approval consolidating such Lots;

3) All structures shall be set back a minimum of forty (40) feet from all property lines;

4) The site shall have frontage on and direct vehicular access to a public road;

5) Shall not be approved unless plans prepared by an architect or engineer are submitted which clearly indicate that adequate light, ventilation and fireproofing are provided;

DRAFT

6) The dwelling facility and its accommodations shall be functional and convenient with regard to the specific needs of the group to be housed in the facility;

7) Shall be approved only after Council has found that plans and programs for management of the dwelling are adequate and appropriate to the population to be housed and that adequate provisions have been made to assure the safety and welfare of the residents of the facility and of the adjacent neighborhood;

8) All mechanical equipment shall be screened from the view of adjoining properties;

9) All waste collection/storage areas shall be located at least fifty (50) feet from the nearest building and shall be enclosed by a solid masonry screen wall;

10) The Lot Coverage by all Principal and Accessory Buildings shall not exceed forty percent (40%);

11) Ingress, egress, and internal traffic circulation shall be designed to ensure access by emergency vehicles;

12) The parking and circulation plan shall be referred to the Fire Official for comments regarding traffic safety and emergency access;

13) The applicant shall file a detailed statement of intent describing the proposed use of the building, in which the statement shall detail the proposed number and nature of the anticipated occupants;

14) Shall be in compliance with the Pennsylvania Department of Health, Department of Public Welfare, and Department of Mental Health standards applicable at the time of issue of license, and with the latest revision of licensing requirements. A license or certification shall be obtained from all appropriate governmental agencies prior to the issuance of an occupancy permit

15) A Certificate of Occupancy shall be required before any Unit may be occupied;

16) Any change in the conditions of original approval shall constitute a new use and the full procedure for obtaining approval of the conditional use shall be required.

AAA. Oil & Gas Development, Drilling and Related Operations (Also reference Injection Wells, Impoundments, Natural Gas Compressor Stations sections)

1) A conditional use application shall be accompanied with written permission from the property owner(s) who has legal or equitable title in and to the surface of the drill site or a demonstrable documentation of the applicant's authority to occupy the surface for the purposes of mineral extraction. In addition, the applicant shall include the proposed pipeline route from the oil and gas drill site to the transmission line and how fluids will be brought to and from the site;

2) Conditional use approval is non-transferrable without the consent from the Municipality of Monroeville, and shall automatically terminate, unless extended, if drilling is not commenced within one (1) year from the date of the issuance of the permit for the conditional use;

DRAFT

3) The well site shall maintain a minimum distance from protected structures, as set forth in subsection (5) below. The Municipality reserves the right to increase any setback based on physical characteristics of the site and evidence received at the public hearing necessitating an increase in the minimum setback, including but not limited to topography, wind conditions, air modeling studies, woodlands, hydrogeological studies, and distance from structures, parks, schools and residential neighborhoods as part of the conditional use process;

4) Oil and gas development shall only be permitted to be undertaken on property whose overall acreage is a minimum of ten (10) acres or larger. Multiple property owners may combine adjoining properties to meet this minimum acreage requirement;

~~5)~~ The minimum setback distance from all Protected Structures shall be 500' ~~one thousand two hundred (1,200) feet;~~ FROM THE CENTER OF THE WELLHEAD ~~PAD OR EDGE OF PROPERTY BOUNDARY????~~

6) Oil and gas well/pads shall comply with all screening and bufferyard requirements of the zoning district in which the pad/well is located;

7) In construction of the oil and gas well/pad, the natural surroundings should be considered and attempts made to minimize impacts to adjacent properties;

8) A site plan prepared by an engineer or surveyor licensed in Pennsylvania shall be provided to establish compliance with all applicable regulations. All drilling and production operations, including derricks, vacuum pumps, compressors, storage tanks, vehicle parking, structures, machinery, temporary housing, ponds and pits, and ancillary equipment on the well site shall be identified. All protected structures within 1,500 feet ~~(or 1,200)~~ of the property lines of the well site shall be identified. All roads related to the development or facility must also be shown. A sufficient number of copies of the site plan shall be provided for review and comment by all Municipal emergency service organizations;

9) Scheduling. The applicant shall provide a schedule with the application indicating the anticipated beginning and ending dates for the following activities:
   a) Well site preparation;
   b) Drilling activity;
   c) Completion (perforating);
   d) Stimulation (hydraulic fracturing);
   e) Production work;
   f) Plugging; and
   g) Site restoration.

10) The applicant shall identify the means and availability of the site for disposal of cuttings, fracturing fluids, oil, toxic materials, hazardous materials, and other waste products;

DRAFT

11) As part of the conditional use application, the applicant shall have submitted all necessary applications for permits and plan approvals from PADEP. Prior to beginning the drilling site construction, the applicant shall submit to the Municipality a copy of all permits issued by PADEP. In addition, the Municipality shall be provided with copies of all plans (erosion and sedimentation control, grading, water management plan, water withdrawal plan, pollution prevention contingency, alternate waste disposal, etc.) required and approved by PADEP. The Municipality shall be provided with a timeline and activity schedule, and all required permits shall be maintained, commencing at site construction and continuing throughout the duration of drilling and production testing (hydraulic fracturing) operations. Any suspension or revocation of permits or other penalties imposed by PADEP shall be reported to the Municipality, and shall constitute a violation of the Municipality land use approval and may result in suspension of such approval;

12) The applicant shall provide an environmental impact analysis. The environmental impact analysis shall describe, identify and analyze all environmental aspects of the site and of neighboring properties that may be affected by the proposed operations or the ultimate use proposed to be conducted on the site. The limits of the impact area to be studied shall be reviewed and approved by the Planning Commission and the Municipal Council. The environmental impact study shall include, but not be limited to, all critical impact areas on or off-site that may be impacted by the proposed or ultimate use of the facility, including the impact on the critical areas, the protective measures and procedures to protect the critical areas from damage, and the actions to be taken to minimize environmental damage to the critical areas on the site and surrounding areas during and after completion of the operation. Critical impact areas include, but are not limited to stream corridors; streams; wetlands; slopes in excess of twenty-five (25%) percent; sites where there is a history of adverse subsurface conditions or where available soils information or other geotechnical data, including data from the Bureau of Mines indicates the potential for landslides, subsidence or other subsurface hazards; Class I agricultural lands; highly acidic or erodible soils; carbonate or highly fractured bedrock; aquifer recharge and discharge areas; areas of unique or protected vegetation, wildlife habitat, and areas of historic, cultural and/or archaeological significance;

13) General Standards

a) Best management practices shall be followed;

b) The uses regulated by this Section are determined to be land developments and subject to the applicable provisions of the Municipal's Subdivision and Land Development Ordinance, as it may be amended;

c) Any hazardous or toxic material shall be securely contained, stored and removed in accordance with applicable state or Federal regulations. On-site disposal is prohibited. All hazardous materials stored must be clearly marked, identifying the contents, chemicals, and hazards as required by the OSHA Hazard Communication Standard 29 CFR 1910.1200 and National Fire Protection Association ("NFPA") Code 104 - Standard System for the identification of the Hazards of Materials for Emergency Response. All regulated tanks are to be labeled to a NFPA specification;

DRAFT

d) Storage of Equipment

i. No equipment, including drilling, re-drilling, re-working or other portable equipment, shall be stored on the development or facility which is not essential to the everyday operation of the development or facility. This includes the removal of idle equipment unnecessary for the operation of wells.

ii. Lumber, pipes, tubing, and casing shall not be left on the development or facility except when drilling or well-servicing operations are being conducted on the site.

iii. It shall be illegal to park or store any vehicle or item of machinery on any street, ROW or in any driveway, alley or on the development or facility which constitutes a fire hazard or an obstruction to or interference with fighting or controlling fires, except that equipment which is necessary for the maintenance of the development or facility or for the gathering or transporting of hydrocarbon substances from the site.

e) Fracture fluid storage ponds, open pits and reserve pits are highly discouraged. Closed-loop systems and other related best management practices, including but not limited to the use of netting over fracture fluid ponds, shall be used during the drilling or completion of any well;

f) Fresh water storage ponds are permitted. The use of non-potable water is strongly encouraged;

g) The oil and gas development or facility shall be located, designed and constructed to minimize the removal of trees and shrubs, protect all natural resources, and minimize the amount of surface disturbance.

h) The operator shall not clear brush or trees by way of burning and shall chip, grind, or remove all tree stumps from properties it clears for development purposes.

i) The location and design of structures and site improvements shall be integrated with the natural color, form, and texture of the surrounding area.

j) All operations shall be in accordance with applicable Federal laws and regulations, the Pennsylvania Oil and Gas Act (58 P.S. §§ 601.101 et seq.), as amended, and pursuant to all other applicable rules, regulations, and procedures adopted pursuant thereto;

k) The operator shall be responsible for prevention and prompt removal of spills involving waste materials, oil, and toxic or hazardous materials.

l) Multiple well pad sites on any one (1) oil and gas development shall be prohibited, unless the operator proves to the satisfaction of the Municipality that the underlying geology makes using a single well pad impractical.

DRAFT

m) Changes in the site plan, including but not limited to any expansion of the ground surface area used and/or devoted towards drilling operations, requires a new conditional use approval pursuant to the terms and conditions of this Section of the Ordinance.

n) At least thirty (30) days prior to any development activity at the development or facility, the operator shall provide the following information to each property owner within 4,000 feet of the planned surface location of the development or facility.

i. A copy of the site plan submitted as part of the conditional use application;

ii. A general description of the planned operations at the development or facility and associated equipment to be used;

iii. The contact information for the operator; and

iv. The availability of the operator to hold a meeting locally with such residents to present the operator's plans for the development or facility and to allow for questions and answers. The meeting(s) shall be held prior to the commencement of development activity.

o) A duly authorized representative of the Municipality, trained by the operator or agents of the operator, shall have the authority in relation to the enforcement of this Section to enter upon the property of a development or facility for the purpose of inspecting the equipment and all other aspects of the site necessary to assure compliance with this Section.

p) The operator of any development or facility shall notify the Emergency Management Coordinator, Municipal Manager, and Municipal Engineer no less than ninety (90) days prior to the startup and abandonment or shutdown of any well site.

14) Pre-drilling, post-hydraulic fracturing and baseline water survey requirements. Prior to drilling and post-hydraulic fracturing, the operator shall be responsible for testing all existing water supplies (surface and groundwater) within one thousand five ~~two~~ hundred ~~(1,200) feet~~ (or 1,500) of the surface location of the well. The purpose of testing is to determine the baseline quality of surface water and groundwater in the immediate vicinity of the proposed well site and to evaluate the resultant changes that may occur or have an impact on the water supply of the site and the surrounding area. If a landowner refuses to allow the operator access to conduct a survey, the operator shall show evidence of such refusal in accordance with applicable Pennsylvania law. In addition, prior to the drilling, the operator will be required to drill a test well outside of the limits of the well pad, but no more than seven hundred fifty (750) feet from the well location, to a depth that intersects all known or viable aquifers for the purpose of obtaining a baseline assessment of the water quality in the vicinity of the site. The test well shall be located such that it is part of the hydrologic system of the drill site. All testing shall adhere to the following:

DRAFT

a) Pre-drilling testing results, both from existing water supplies and from the operator-drilled test well, shall be submitted as part of the conditional use application;

b) Post-hydraulic fracturing testing shall be completed no sooner than one (1) month after hydraulic fracturing activities have ceased and no later than two (2) months after hydraulic fracturing activities have ceased;

c) The post-hydraulic fracturing test results, both from existing water supplies and from the operator-drilled test well, shall be submitted to the Municipality, PADEP and residents within one thousand (1,000) feet of the surface location of the well in accordance with applicable Pennsylvania law, within ten (10) days of receipt of same;

d) Sixty (60) days prior to drilling, the operator shall notify residents with water wells within 4,000 feet of the gas well of its intentions to drill. The operator shall provide proof of notice to the Municipality;

e) All condensate tanks, compressor stations, processing plants and other production facilities shall be equipped with vapor recovery and/or vapor destruction units;

f) The operator shall be responsible for all costs associated with the drilling and testing, and testing shall be done by an independent, state-certified water testing laboratory agreed upon by the Municipality;

g) The operator shall provide a water withdrawal plan for the development identifying the source of water, how many gallons will be used and withdrawn each day, the origination of the water, proposed truck routes, and all permits issued by the Commonwealth of Pennsylvania or any other governmental body. If the development is to be supplied by way of waterlines, the locations of all proposed waterlines are to be identified. The site for the treatment and disposal of the water shall also be identified. The use of non-potable water sources is highly encouraged. The use of injection wells for disposal of fracking fluid is strongly discouraged. The applicant is required to use best management practices;

h) The operator shall hire a hydrogeologist agreed upon by the Municipality to conduct water quality testing. The hydrogeologist shall submit a pre-testing and a pre-drilling plan to be approved by the Municipality. The hydrogeologist shall test for: gallons per minute (gpm) flow rates, yield, groundwater levels, and other pertinent information for all viable aquifer zones by way of drawn-down tests or other suitable means. The hydrogeologist measure and record flow rates in gpm for all surface water sources. Groundwater levels and other pertinent information via draw-down tests or other suitable means shall be measured from all available wells. The operator shall provide GPS coordinates for all test sites; and

i) Operator shall test for the following list of parameters:

DRAFT

		Analyte		
Inorganic	**Trace Metal**	**Organic**	**Microbiology**	**Other**
Alkalinity	Barium	Ethane	Coliform / Ecoli	Volatile Compounds
Chloride	Calcium	Methane		Detergent (MBAs)
Conductivity	Iron	Propane		Organic Carbon
Hardness	Magnesium			Nitrate
Oil/Grease Bromide	Manganese			Radionuclides/ Gross alpha, Radium
Ph	Potassium			Radon
Sulfate	Sodium			Lead
Dissolved Solids	Stontium			Total Coliform Bacteria
Residue	Aluminum			
Turbidity	Lithium			
Ethylene Glycol	Selenium			
Acetone	Boron			

15) Prior to drilling and post-hydraulic fracturing, the operator shall be responsible for testing the soil conditions within the area of the drill site, but no greater than five hundred (500) feet from the surface location of the well. The purpose of testing is to determine the baseline soil conditions in the immediate vicinity of the proposed well site and evaluate resultant changes that may occur or have an impact on the soils of the site and surrounding area:

a) Pre-drilling results shall be submitted as part of the conditional use application;

b) Post-hydraulic fracturing testing shall be completed no sooner than one (1) month after hydraulic fracturing activities have ceased and no later than two (2) months after hydraulic fracturing activities have ceased;

c) The results shall be submitted to the Municipality and the PADEP within ten (10) days of their receipt;

d) The operator shall be responsible for all costs associated with the sample collection and testing, and testing shall be done by an

DRAFT

independent, state-certified water testing laboratory agreed upon by the Municipality; and

e) Operator shall test for the following parameters:

	Analyte		
Inorganic	**Trace Metal**	**Microbiology**	**Other**
Alkalinity	Barium	Coliform / Ecoli	Volatile Compounds
Chloride	Calcium		Nitrate
Hardness	Iron		Radionuclides gross Alpha, Radium
Oil/Grease Bromide	Magnesium		Lead
Ph	Manganese		
Sulfate	Potassium		
Residue (filterable)	Sodium		
Residue (non-filterable)	Stontium		
Bromide	Arsenic		
	Zinc		
	Aluminum		
	Lithium		
	Selenium		
	Boron		

16) The applicant shall provide an Air Quality Study. The Study shall be prepared by experts acceptable to the Municipality and submitted with the application and shall include an analysis of the existing and predicted air quality levels, including smoke, odors, fumes, dust, and pollutants at the site. This report shall contain the sources of the information, the data and background tests that were conducted and the conclusions and recommendations of the professionals preparing the report that would be required to maintain the air quality at a level equal to or better than the existing background level prior to the proposed use; or the applicant/developer shall submit a statement

DRAFT

prepared by an engineer warranting that the nature of the use will produce no impact on air quality.

a) Air-contaminant emissions shall be in compliance with all municipal, county, state, and Federal regulations, including, without limitation, the provisions of this Ordinance, as amended, and all applicable regulations for smoke, ash, dust, fumes, gases, odors, and vapors.

b) The operator shall take the necessary safeguards to ensure appropriate dust- control measures are in place to prevent visible plumes of dust from crossing the property line or adversely impacting neighboring properties.

17) Access directly to state roads shall require a Pennsylvania Department of Transportation (PENNDOT) highway occupancy permit prior to initiating any work at the drill site. The permit shall be provided to the Municipality;

18) Beginning with its intersection with a public street, any ingress or egress point for the development or facility shall be paved for the first fifty (50) feet and improved with limestone or other material for the next 100 feet in a manner that no water, sediment, or debris will be carried onto any public street. If any amount of mud, dirt, or other debris is carried onto public or private ROW from the well site, the operator shall immediately clean the roads and implement a remedial plan as directed by the Municipality to keep the streets continuously clean.

a) The first fifty (50) feet from the existing edge of pavement extending into the site shall consist of the following material:

i. Compacted subgrade.

ii. PennDOT Class 4 geotextile fabric.

iii. Eight (8) inches of AASHTO No. 1 crushed aggregate base course.

iv. Two (2) inches of PennDOT 2A aggregate.

v. Six (6) inches of superpave 25 mm binder course.

b) The remainder of the driveway to the well pad shall be constructed with the following material:

i. Eight (8) inches of AASHTO No. 1 crushed aggregate base course.

ii. Two (2) inches of PennDOT 2A aggregate.

c) Ingress and egress points for all public and private driveways or roadways shall be located and improved in order to:

i. Meet Pennsylvania Code 67, Chapter 441, Access to and Occupancy of Highways by Driveway and Local Roads, PennDOT Design Manual 2.

DRAFT

ii. Ensure adequate capacity for existing and projected traffic volume.

iii. Provide efficient movement of traffic, including appropriate turning radii and transition grade.

iv. Minimize hazards to highway users and adjacent property and human activity.

d) All applicable permits or approvals must be obtained, including, without limitation:

i. Access or driveway permits to state or county roads.

ii. Overweight or oversize loads.

19) The applicant shall provide the Municipality with a traffic plan depicting proposed truck routes to be used during all phases of operations. The traffic plan shall minimize the impact on Municipality roads. The Municipality reserves the right to alter or amend such routes to accommodate public safety and the flow of traffic. All approved routes shall be designated with identification signs approved by the Municipality;

a) A description of plans for the transportation and delivery of equipment, machinery, water, chemicals, products, materials and other items to be utilized in the siting, drilling, stimulating, completion, alteration and operation of the development or facility. Such description shall include a map showing the planned vehicular access roads and the transportation infrastructure being proposed and the type, weight, number of trucks and delivery schedule necessary to support each phase of the development.

b) An inventory, analysis and evaluation of existing road conditions on Municipal roads along the proposed transportation route identified by the application, including photography, video and core boring as determined to be necessary by the Municipal engineer(s).

c) Prior to the commencement of any activity at the development or facility, the operator shall enter into a municipal roadway maintenance and repair agreement with the Municipality, in a form acceptable to the Municipality, regarding maintenance, repair and bonding of municipal roads that are to be used by vehicles for development activities. The applicant shall take all necessary corrective action and measures as directed by the Municipality pursuant to the agreement to ensure the roadways are repaired and maintained during and at the conclusion of all development activities.

d) The operator shall take the necessary safeguards to ensure that the municipal roads utilized remain free of dirt, mud, and debris resulting from development activities and/or shall ensure such roads are promptly swept and cleaned if dirt, mud, and debris occur.

e) The operator shall take all necessary precautions to ensure the safety of persons in areas established for road crossing and or/adjacent to roadways (for example, persons waiting for public or school

DRAFT

transportation). Where necessary and allowed, during periods of anticipated heavy or frequent truck traffic associated with the development of the facility, the operator will provide flagmen to ensure the public safety and include adequate signs and/or other warning measures for truck traffic and vehicular traffic;

f) There will be no staging of trucks or equipment on local roads;

g) A traffic control plan in conformance with PennDOT standards shall be provided.

20) Geophysical Exploration (Seismic Testing).

a) For any areas of the municipality where the applicant intends to conduct seismic testing, a licensed geologist must provide a report regarding the ability of the land to subside due to the proposed operations. This report must detail the amount of risk of seismic activity because of existing subsurface conditions and with the introduction of drilling and fracking.

b) The applicant shall post a bond or other security in a form to be approved by the Municipality in the amount of $1,000,000 to cover the cost of any damages as a result of seismic testing.

21) Prior to the initiation of work at a site, the applicant shall execute an agreement with the Municipality for a Type 2 permit in accordance with Chapter 189.4(B) of the Pennsylvania Code. The applicant shall post a bond in favor of the Municipality in an amount and form acceptable to the Municipality to guarantee repair and restoration of Municipality-owned roads and bridges;

22) Insurance. Applicant shall furnish to the Municipality a Certificate of Liability Insurance naming the Municipality as an additional insured with respect to operations conducted within the Municipality, showing proof of liability insurance covering commercial, personal injury, and general liability in amounts not less than $25,000,000 per occurrence. The applicant shall fully defend, protect, indemnify, and hold harmless the Municipality, its departments, agents, officers, employees, or volunteers from and against such and every claim, except for those claims relating to any negligent, willful or intentional acts of the Municipality, its department, agents, officers, employees, or volunteers. The insurance coverage may consist of a combination of self-insurance, excess coverage and umbrella coverage.

23) An off-street area, at the entrance to the drill site and outside of the road right-of-way shall be provided for vehicles to stage while gaining access to the well site to prevent an interruption to the normal flow of traffic. Access roads accessing the drill site shall be paved with an impervious material from the first one hundred fifty (150) feet from the public road to the drill site. The remainder of the access road shall be constructed with a dust-resistant aggregate material, and shall provide for adequate control of stormwater runoff and erosion and sedimentation control;

24) As part of the conditional use application, applicant shall provide the Municipality and the Municipality's fire department with a copy of its PADEP approved preparedness, prevention and contingency (PPC) plan. Not less than thirty (30) days prior to the commencement of drilling its first well, the

DRAFT

applicant shall provide, at its sole expense, a group training program for the Municipality's emergency responders. Such training shall be updated on an annual basis;

25) As part of its conditional use application, the applicant shall provide the Municipality and its emergency responders with the name and 24-hour contact information of the individual who is supervising the drilling operation. Applicant shall also provide similar contact information for all subcontractors, and shall be responsible for updated such a list as required;

26) The access road shall be gated to prevent unauthorized access to the well site. The well site 911 address shall be posted on a sign at the access gate, along with the name and 24-hour emergency contact phone number of the owner and operator of the well site. In lieu of an access gate, the operator may provide a 24-hour manned access point during the drilling operation;

27) No well site lighting used for or associated with the drilling operation shall be positioned or directed in such a manner so that it shines directly upon public roads, adjacent properties or property in the general vicinity of the well site. Site lighting shall be directed downward and shielded so as to avoid glare. Lumen levels shall not exceed zero foot-candle at the well site property line;

28) All drilling operations shall be conducted in such a manner to minimize dust, vibration or noxious odors. All equipment used shall be constructed and operated so that vibrations, dust, odors and other harmful and annoying effects are minimized by the operations carried on at the drill site to avoid injury to or annoyance to persons living in the vicinity, nor shall the site or structures thereon be permitted to become dilapidated, unsightly or unsafe;

29) The Municipality may require acoustical blankets, sound walls, mufflers or other alternative methods as proposed by the operator to ensure compliance depending on the location of the proposed drill site to adjacent properties. As part of the conditional use application and prior to commencing drilling operations, the applicant shall establish the residual or background noise level baseline. The baseline shall be established over a seventy-two (72) hour period with at least one twenty-four (24) hour reading on a Saturday or Sunday. A noise consultant/engineer mutually agreed upon by the operator and the Municipality shall be responsible for performing the baseline tests at the applicant's sole cost and expense:

   a) The noise generated during drilling activities, when measured at the nearest protected structure property line or one hundred (100) feet from the nearest protected structure (as measured to the closest exterior point of the building), whichever is closer to the protected structure, shall not exceed the average ambient noise level as determined by the seventy-two (72) hour evaluation:

      i. During drilling activities by more than ten (10) decibels during the hours of 7 AM to 9 PM; and

      ii. During drilling activities by more than five (5) decibels during the hours of 9 PM to 7 AM.

DRAFT

b) The operator shall provide documentation of any established, seventy-two (72) hour evaluation, relied upon to establish an ambient noise level greater than fifty- five (55) decibels (dBa), to the Zoning Officer within three (3) business days of such a request.

c) The noise generated during operating hours activities shall not exceed the average ambient noise level as determined by the seventy-two (72) hour evaluation or default level, whichever is higher:

i. During drilling activities, by more than ten (10) decibels (dBa) during the hours of 7:00 a.m. to 9:00 p.m.

ii. During drilling activities, by more than seven (7) decibels (dBa) during the hours of 9:00 p.m. and 7:00 a.m. or by more than ten (10) decibels (dBa) during hydraulic fracturing operations. The operator shall inform the Municipality of which level (average ambient noise level or default level) is being used.

d) All permanent facilities associated with the oil and gas well/pad shall meet the general noise requirements of this Ordinance. Where a conflict exists the more stringent requirements shall apply.

e) Oil and gas wells/pads or facilities performing the equivalent functions shall be constructed so as to mitigate sound levels, or have installed mitigation devices to mitigate sound levels so as to prevent such activity from being a nuisance to nearby residential or public buildings, medical, emergency, or other public facilities.

i. Effective sound mitigation devices shall be installed to permanent facilities to address sound levels that would otherwise exceed the noise level standards.

f) If a complaint is received by the Municipality regarding noise generated during construction or operation of the compressor station the operator shall, within twenty-four (24) hours following receipt of notification, begin continuous monitoring for a period of forty-eight (48) hours at the nearest property line to the complainant's residential or public building or 100 feet from the complainant's residential or public building, school, medical, emergency, or other public facilities, whichever is closer. The applicant shall report the findings to the Municipality and shall mitigate the problem to the allowable level if the noise level exceeds the allowable rate.

30) As part of the conditional use application, applicant shall submit a survey of the drill site showing the general area where associated gas production equipment (tanks or other surface installations) are to be located and the respective locations and distances to property lines. All sensitive natural features, including those one thousand (1,000) feet outside of the limits of disturbance, as defined on the approved PADEP erosion and sedimentation plan, shall also be shown;

31) Prior to drilling an oil or gas well or multiple oil or gas wells at a location, but no later than two (2) weeks prior, the operator shall provide the following

DRAFT

information to each resident within one thousand (1,000) feet of the planned surface location of the well(s):

a) A copy of the well survey plat showing the location(s) of the planned well(s);

b) A general description of the planned operations at the proposed well site, and the associated equipment to be used in development of the wells; and

c) The contact information of the operator.

32) Any on-site associated gas production equipment (well head, separator, condensate tanks and pipeline) shall be painted an earth tone color to blend in with the surrounding area;

33) Fencing, screening and buffering

a) The Municipality may, in its sole discretion require permanent fencing and/or landscaping to buffer post-drilling facilities or gas production equipment from adjacent properties;

b) Security fencing consisting of a permanent galvanized chain-link fence, a minimum of eight (8) feet in height, topped with either razor or barbed wire shall be installed prior to the commencement of any activity at every well site to secure wellheads, storage tanks, separation facilities, water or liquid impoundment areas, and other mechanical and production equipment and structures on the well site. SEE IMPOUNDMENTS SECTION FOR ADDITIONAL REQUIREMENTS/REGULATIONS

c) Security fencing shall be equipped with lockable gates at every access point, and having openings no less than twelve (12) feet wide. Gates shall be kept locked except when being used for access to the site. Additional lockable gates used to access the well site, freshwater ponds or open pits by foot may be allowed, as necessary. The fence posts shall be set in concrete at sufficient depths to maintain the stability of the fence.

d) The Municipality's first responders shall be given means to access the well site in case of an emergency via lock box or a Municipal-approved equivalent. The applicant must provide the Allegheny County 911 Communications Center with necessary information to access the development or facility in case of an emergency.

e) Warning signs shall be placed on the fencing surrounding the development or facility, providing notice of the potential dangers and the contact information in case of an emergency. During drilling and hydraulic fracturing, clearly visible warning signage must be posted on the well site.

f) In construction of the oil and gas development or facility, the natural surroundings shall be considered and attempts made to preserve existing trees and other native vegetation. Existing trees and respective root systems should not be disturbed whenever possible.

DRAFT

34) Any damage to public property resulting from oil and gas operations must be repaired and restored within sixty (60) days of completing the drilling operations or as agreed to by the Municipality. If repairs cannot be completed in the required timeframe, the operator shall post sufficient financial security with the Municipality to ensure completion of the repairs or restoration;

35) In the event of any spill, leak or malfunction, the operator shall promptly remove or cause to be removed all waste material from any private of public property affected by such spill, leak or malfunction;

36) The public roadway at the entrance to the access road shall be kept free of all mud, debris, trash or other waste material;

37) The facility and/or its operations shall at all times comply with all applicable permits and requirements of the PADEP, the United States Environmental Protection Agency, and any other governmental authority having jurisdiction over its operations. The facility and operator shall also at all times comply with all federal, state and local laws, ordinances and regulations promulgated to protect the environment. The applicant shall demonstrate that the proposed well site operations do not violate the rights of the citizens of the Municipality pursuant to the Pennsylvania Environmental Rights Amendment;

38) Upon request of the Emergency Management Coordinator, the operator shall, prior to drilling its first gas well in the Municipality, make available with at least thirty (30) days' notice, at the applicant's sole cost and expense, an appropriate group training program for emergency responders and Municipal code enforcement personnel. Such training shall be made available at least annually during any year that drilling activities take place at the oil and gas development or facility. Training should cover each phase of the development from site work to well completion. The Municipality shall require a minimum of four (4) hours of annual training, with additional hours added at the recommendation of the Fire Chief annually. If additional wells are drilled at the site, the operator and Emergency Management Coordinator will determine if additional training is required.

39) The applicant shall maintain at the property and on file with the municipality a current list and the Material Safety Data Sheets ("MSDS") for all chemicals used in the drilling operations (including but not limited to types of additives, acids, polymers, salts, surfactants and solvents) and in any fracturing operations. If the PPC requires availability and/or utilization of special equipment or supplies particular to the hazards or conditions addressed in the PPC, the Municipality shall require the operator to reimburse the Municipality for the cost of procurement of such special equipment or supplies;

40) The applicant or well site operator shall take the necessary precautions to ensure the safety of persons in areas established for road crossings and/or adjacent to roadways during periods of heavy traffic to and from the well site, through the use of flaggers or other approved traffic control methods;

41) All well site construction (grading, installation of erosion and sedimentation controls, roadway construction, etc.) shall be performed between the hours of 7 AM and 7 PM Monday through Saturday;

DRAFT

42) The Municipality reserves the right to impose additional conditions and safeguards necessary to protect the health, safety and welfare of its residents in the event of any unique circumstances or unintended consequences of the oil and gas operations in accordance with the Pennsylvania Municipalities Planning Code;

43) SITE PLAN REVIEW FOR OIL AND GAS WELLS No Zoning Permit or Zoning Occupancy Permit shall be issued for an Oil and Gas Well until a Site Development Plan has been submitted, reviewed and approved by the Municipality of Monroeville in accordance with the following provisions:

a) The application for approval of a proposed Site Development Plan shall be accompanied by a fee established by resolution of Council to cover the costs of review. The Zoning Officer shall set forth a reasonable time schedule to be followed prior to the presentation of the application to the Council;

b) The application shall consist of not less than twenty (20) copies of the letter of application together with not less than twenty (20) copies of the drawings submitted as part of the Site Development Plan. The Proposed Site Development Plan, a topographic plan, prepared by a professional engineer registered in the Commonwealth of Pennsylvania, to a scale no greater than 1 inch = 200 feet, on a standard sheet size of 24"H x 36"W, to include the following:

1. Title block giving name of development, property owner, developer, north point, key location map, registration stamp, date and scale on a standard sheet size of 24"H x 36"W, with Index;
2. Property lines, total acreage of parcel proposed for development and any existing Oil and Gas Well areas adjacent to the proposed Oil and Gas Well;
3. All existing streets, right of ways, and easements related to the development;
4. Owners of adjacent properties, including the location of any existing structures and driveway locations;
5. The location of relevant natural features on site, including, but not limited to, streams or other natural water courses and adjacent areas which are subject to flooding, and significant stands of existing trees;
6. The location of relevant natural features abutting properties within three hundred (300 feet) including, but not limited to, streams or other natural water courses and adjacent areas which are subject to flooding, and significant stands of existing trees;
7. The location of structures on abutting property within three hundred (300) feet of common property lines;
8. The location of the oil or gas well and any associated facilities and equipment;
9. The location of existing structures and accessory uses on site;
10. The location of vehicle and equipment cleaning and tire cleaning areas. A program for removing mud and other site debris from the municipal streets;

11. The location of proposed access roads and proposed haul roads;
12. The location of storm water and sediment controls;
13. A landscaping plan shall include fence and vegetation, specifically a identifying the types of perennial coverage of coniferous trees and shrubs, and or fencing of the site after construction so as to screen the well and related equipment from adjoining properties, parks and streets, public and private;
14. A Sight Distance Evaluation Plan with the oil and gas well extraction site at the center of the [plan, radiating out five hundred feet from this spot, to show the sightlines to all structures, parks and any public or private street.
15. An Environmental Impact Statement, which shall include the following:
    a. A description of existing conditions in the area;
    b. A land use history of the property;
    c. A description of the proposed Oil and Gas Well and associated facilities;
    d. An assessment of the proposed Oil and Gas Well on the natural environment, including summary descriptions, technical data, maps and diagrams, that specifically examines geology, topography, soils, slopes, hydrology, vegetation, wildlife and air quality;
    e. The relationship of the proposed Oil and Gas Well to the surrounding community, including the impact on land use plans, policies and controls;
    f. An inventory of private properties served by private water supplies within 3000 feet of the permit area;
    g. A historical record of previous Oil and Gas Well operations; and
    h. A description of existing conditions, including if a Oil and Gas Well exists, and the construction details of that existing Oil and Gas Well.

~~BBB. Impoundments SEE OIL AND GAS AND INJECTION WELL SECTIONS FOR ADDITIONAL REQUIREMENTS/REGULATIONS (**THIS SECTION OUT OF ALPHBETICAL ORDER)**~~

~~6) Impoundments shall be permitted only on the parcel/property where the drilling site is located, and shall be considered an accessory use;~~

~~7) The minimum setback distance from all Protected Structures shall be one thousand two hundred (1,200) OR 1,500' feet;?? FROM THE EDGE OF THE IMPOUNDMENT~~

~~8) No off-site impoundments, drill cutting pits or reserve pits shall be permitted;~~

~~9) Impoundments shall not use surface aerators;~~

~~10) All drill site impoundments shall be secured with a temporary fence with a secured gate as follows:~~

~~i) The fence shall be of chain-link design, minimum 11 gauge thickness and be at least eight (8) feet high topped with either razor or barbed wire;~~

~~j) The fence shall remain in place at all times until the impoundment is removed;~~

~~k) Impoundments shall comply with all state and federal laws in regard to leak detection and monitoring, and must comply with EPA 9090 or any superseding regulation;~~

~~l) An impoundment may not contain any liquid substance generated from any well(s) located on another property;~~

~~m) No impoundment shall hold more than one million (1,000,000) gallons of liquid;~~

~~n) An impoundment must be completely enclosed, with solid walls and a roof;~~

~~o) As part of its PPC plan, an operator shall provide the details for emergencies involving impoundments; and~~

~~p) An applicant shall provide the Municipality with a baseline hydro-geologic study to document baseline quality.~~

CCC. Parking Garage

1) A traffic impact study shall be required; the study shall include recommended dimensions of parking spaces and aisle widths, to be approved by the Municipality on a case by case basis, which may deviate from the standard Municipal parking dimensions.

2) A parking garage shall be used exclusively for the parking or storage of licensed/registered vehicles;

3) The maximum grade of the parking floors shall be six percent (6%);

4) There shall be a minimum of one (1) elevator for each two hundred and fifty (250) parking spaces or fraction thereof;

5) Compliance with all requirements of the Americans with Disability Act;

6) All waste collection/storage areas shall be located at least fifty (50) feet from the nearest building and shall be enclosed by a solid masonry screen wall;

7) All mechanical equipment shall be screened from the view of adjoining properties;

8) No direct beams or rays of light from exterior lighting fixtures, signs or vehicles maneuvering on the development site, shall be permitted to shine into the private living areas and associated open spaces of adjacent residential properties;

DRAFT

9) No sale, rental service or repair operations of vehicles shall be performed inside the garage; and

10) Access to parking garage and parking areas containing more than (5) spaces shall be designated to ensure that entering and exiting vehicles do not disrupt vehicle and pedestrian circulation patterns. At a minimum, all garage doors, ticket machines or entrance gates shall be located so as to allow a minimum of twenty (20) feet clearance from sidewalks and street rights-of-way. Driveway's serving such parking areas shall be located at least sixty (60) feet from intersecting street rights-of-way and joint access to abutting parcels shall be provided wherever practical.

DDD. Personal Care Home Facility Also see: *"Assisted Living Facility", "Continuing Care Facility", "Hospice", "Nursing Home Facility", "Skilled Nursing Facility".*

1) A traffic impact study shall be required;

2) A personal care home facility shall be located on property, which consists of one or more Lots and contains a minimum of one (1) acre. If more than one Lot or parcel is used, they must be contiguous. Personal care home facilities occupying more than one Lot or parcel shall obtain Subdivision approval consolidating such Lots;

3) All structures shall be set back a minimum of forty (40) feet from all property lines;

4) The site shall have frontage on and direct vehicular access to a public road;

5) Shall not be approved unless plans prepared by an architect or engineer are submitted which clearly indicate that adequate light, ventilation and fireproofing are provided;

6) The dwelling facility and its accommodations shall be functional and convenient with regard to the specific needs of the group to be housed in the facility;

7) Shall be approved only after Council has found that plans and programs for management of the dwelling are adequate and appropriate to the population to be housed and that adequate provisions have been made to assure the safety and welfare of the residents of the facility and of the adjacent neighborhood;

8) All mechanical equipment shall be screened from the view of adjoining properties;

9) All waste collection/storage areas shall be located at least fifty (50) feet from the nearest building and shall be enclosed by a solid masonry screen wall;

10) The Lot Coverage by all Principal and Accessory Buildings shall not exceed forty percent (40%);

11) Ingress, egress, and internal traffic circulation shall be designed to ensure access by emergency vehicles;

12) The parking and circulation plan shall be referred to the Fire Official for comments regarding traffic safety and emergency access;

DRAFT

13) The applicant shall file a detailed statement of intent describing the proposed use of the building, in which the statement shall detail the proposed number and nature of the anticipated occupants;

14) Shall be in compliance with the Pennsylvania Department of Health, Department of Public Welfare, and Department of Mental Health standards applicable at the time of issue of license, and with the latest revision of licensing requirements. A license or certification shall be obtained from all appropriate governmental agencies prior to the issuance of an occupancy permit

15) A Certificate of Occupancy shall be required before any Unit may be occupied;

16) Any change in the conditions of original approval shall constitute a new use and the full procedure for obtaining approval of the conditional use shall be required.

EEE. Place of Worship (Religious Establishment Church, Synagogue, Temple, Mosque, etc.)

1) A traffic impact study shall be required;

2) The minimum lot area is one (1) acre;

3) All structures shall be set back a minimum of forty (40) feet from all property lines and shall be no higher than thirty-five (35) feet;

4) If a residential facility (such as a convent, monastery or other group living quarters) is proposed as part of a place of worship, no more than ten (10) persons shall be housed;

5) One (1) dwelling (such as a parsonage) may be located on the same lot with a church, provided that all requirements of this ordinance for single-family residential dwellings in the same zoning district, can be met in addition to the minimum lot area, lot width and yard requirements applicable to the place of worship;

6) Permitted accessory uses may include:

a) Primary or secondary school;

b) Day care center;

c) Gymnasium/recreational facility;

d) Kitchen;

e) Parsonage, parish house or rectory; and

f) Other uses that are customarily accessory to religious uses and places of worship.

7) Accessory uses shall be on the same lot as the primary religious use/place of worship and shall meet the following requirements:

DRAFT

a) Accessory uses shall meet area and bulk requirements of the zoning district in which they are located; and

b) Accessory uses shall be setback a minimum of twenty (20) feet from a residential use or district.

8) Outdoor play spaces shall be completely enclosed by a safe and adequate fence or wall a minimum of four (4) feet in height, unless a greater height is required by the governing body. Any outdoor play area potentially susceptible to encountering vehicles leaving the roadway, travel lanes, or access ways shall be protected by a barrier capable of preventing the vehicle from entering the play area. Outdoor play shall be limited to the hours between dawn and dusk, prevailing local time;

c) Parking is not permitted within Ten (10) feet of the side or rear property lines;

d) Parking is prohibited within the front yard areas;

e) Shared parking with surrounding uses is encouraged for all places of worship;

f) If the parking area is adjacent to a residential use, an additional ten (10) foot setback shall be provided for parking areas with more than ten (10) vehicles;

g) The place of worship shall have direct access to a public street with sufficient capacity to accommodate the traffic generated;

h) The number of points of the ingress/egress shall be based upon projected peak hour traffic and approved by the Municipal Traffic Engineer to ensure public safety;

i) All access drives shall provide the minimum required sight distances for motorist;

j) The primary visitor drop-off and pick-up areas shall be located in a manner that does not cause undue adverse traffic impacts (both pedestrian and vehicular) on the surrounding neighborhood;

k) All mechanical equipment shall be screened from the view of adjoining properties;

l) All waste collection/storage areas shall be located at least fifty (50) feet from the nearest building and shall be enclosed by a solid masonry screen wall;

m) The required foot-candle illumination shall not create glare conditions on adjacent properties or roads; and

n) A minimum of a four (4) foot high opaque fence is required for all side and rear yard property lines.

FFF. Planned Non-Residential Development (Planned Group Unit / Planned Development)

1) See Article VII.

GGG. Planned Residential Development

1) See Article VI.

DRAFT

HHH. Public Use / Public Building

1) A traffic impact study and a parking demand analysis shall be required;

2) The minimum site required shall be one acre;

3) Any outdoor storage of materials or equipment or other activity, which is required to be done outdoors, such as composting, chipping or recycling, shall be screened from adjoining residential properties by a six-foot opaque fence and by a buffer yard;

4) All other activities and operations shall be conducted within a completely enclosed building;

5) Buildings which house public safety or maintenance vehicles shall be located on the site so that vehicles and equipment can be maneuvered without interrupting traffic flow or blocking public streets;

6) Ingress and egress shall be designed to maximize sight distance along adjacent public streets;

7) All waste collection/storage areas shall be located at least fifty (50) feet from the nearest building and shall be enclosed by a solid masonry screen wall;

8) All mechanical equipment shall be screened from the view of adjoining properties;

9) Rear and side yard separation shall be provided in accordance with Article III: District Regulations.

10) Buffer yards shall be provided in accordance with §808.

11) Security Fencing--Substation

III. Public Utility Facility

1) A traffic impact study shall be required;

2) The architectural design, landscaping, and site development must be in keeping with the character of the area in which the public utility facility is to be located, consistent with the nature of the public utility facility and the public need or convenience in having the public utility facility;

3) Provision must be made for proper storage of all materials and equipment when not in use;

4) All mechanical equipment shall be screened from the view of adjoining properties;

5) All waste collection/storage areas shall be located at least fifty (50) feet from the nearest building and shall be enclosed by a solid masonry screen wall;

6) Maintenance vehicles shall be stored within an enclosed building; and

DRAFT

7) Outdoor storage of materials or equipment, other than maintenance vehicles, shall be permitted only if the storage area is completely enclosed by a minimum eight (8)-foot fence with locking gate and is screened by one hundred percent (100%) opaque screening material placed in the fencing or by a six (6)-foot dense, compact ever green hedge, or as determined by the Municipality as adequate to ensure the protection of adjacent residential properties considering topography and sight lines. Material storage area shall be a dust-free, all-weather surface such as asphalt, concrete or compacted gravel.

JJJ. Quarry

1) A traffic impact study shall be required;

2) A six-foot fence shall completely enclose hazardous portions of the fills, cuts, pits and water holes on the property where quarry operations are underway. The fence shall be constructed to have openings no larger than six inches;

3) Buffers for mining and quarrying operations. No strip mining, stockpiles, waste piles, processing or manufacturing equipment and no part of the open excavation or quarrying pit shall be located closer to the following activities than:

   a) Residential, conservation or agricultural: 500 feet;

   b) Street: 100 feet;

   c) Business: 200 feet;

   d) Industrial: 100 feet;

   e) These buffers shall apply to any existing house, principal structure or playground except for any residence or structures located on the property subject to the application;

4) All applicants shall submit a site plan showing the location of all access roads, drilling sites, well heads, pipelines, mining or quarrying operations or other surface disturbance activities taking place on the site;

5) All applicants shall submit a grading plan and obtain a grading permit from the Municipality;

6) All applicants shall submit a stormwater management plan and obtain stormwater management approval from the Municipality;

7) All mechanical equipment shall be screened from the view of adjoining properties;

8) All waste collection/storage areas shall be located at least fifty (50) feet from the nearest building and shall be enclosed by a solid masonry screen wall;

9) All applicants shall construct visually insulating and sound dampening barriers to screen any above-ground appurtenances, quarrying sites or other above ground activities or operations from adjoining properties; and

10) An irrigation / sprinkler system shall be installed to prevent any dust from the operation to leave the site.

DRAFT

KKK. Recreational Facility

1) Also see: *"Athletic Facility", "Day Spa", "Fitness Center", "Gymnasium", "Membership Club", "Sports Facility".*

2) A traffic impact study shall be required;

3) Shall not be located on lots of less than 10,000 square feet;

4) Shall have yards of not less than twenty-five (25') feet;

5) Such recreational facility will be a benefit or convenience to the neighboring residents of the Municipality;

6) Such recreational facility will not cause any potentially detrimental effect on surrounding property values;

7) All mechanical equipment shall be screened from the view of adjoining properties;

8) All waste collection/storage areas shall be located at least fifty (50) feet from the nearest building and shall be enclosed by a solid masonry screen wall;

9) Such recreational facility will not cause any potential disruption or nuisance of or to adjacent lots or residences;

10) Any proposed recreational facility will not cause any detrimental effect to the public health, safety, morals, or general welfare of the Township residents; and

11) Any proposed recreational facility will not interfere or be inconsistent with the residential character of any Residential Districts or Residential Uses.

LLL. Rehabilitation Clinic

1) See: *"Substance Abuse Treatment Facility".*

MMM. Retail Sales, Outdoor

1) The Retail Use shall be limited to 2,000 square feet and maximum height of twenty (20) feet.

2) Parking shall be provided according to the parking requirements of Article IX;

3) The Retail Use shall not be located closer that twenty (20) to the property line of a residential use;

4) The Retail Use shall not operate before 7:00 am or after 9:00 pm;

5) Any outdoor Waste area / dumpster area shall be screened by a solid fence not less than 6' in height;

6) The Retail Use shall have a continuous vegetative buffer comprised of evergreen plants of a height not less than six (6) feet when abutting a residential use;

DRAFT

7) The street level facade shall be transparent between the height of three (3) feet and eight (8) feet above the walkway grade for no less than sixty (60) percent of the horizontal length of the building façade;

8) All primary structures shall provide a prominent and highly visible street level doorway or entrance on the facade of the building;

9) Continuous pedestrian sidewalks shall be provided along the main facade of building;

10) No facilities, equipment or materials which are dangerous or incompatible with the residential environment on the property shall be used;

11) The Retail Use shall not involve the storage of supplies, equipment, raw material or residue material outside of the structure or in any shed or outbuilding on the property; and

12) The Retail Use shall not alter the essential character of the neighborhood or district in which the property is located, nor substantially or permanently impair the appropriate use or development of adjacent property, nor be detrimental to the public welfare

NNN. Salvage *Yard*

1) Minimum lot area shall be five (5) acres;

2) The site shall have frontage on and direct vehicular access to a public road;

3) The outdoor area devoted to the storage of salvage materials shall be set back at least fifty (50) feet from all property lines and one hundred (100) feet from residentially zoned or existing residential properties, 100 feet from the centerline of any waterway and shall be completely enclosed by an eight (8) foot high opaque fence;

4) A landscaped visual barrier will be provided adjacent to a residential use or zone;

5) All completely enclosed buildings used to store salvage material shall be set back at least fifty (50) feet from all property lines;

6) No material may be stored or stacked so that it is visible from adjoining properties and roads;

7) No outdoor burning of oil, grease, tires, gasoline, or other similar material shall be permitted at any time and the owner shall prevent hazards from fire or explosion and shall prevent the accumulation of stagnant water;

8) All junk shall be stored and or arranged so as to permit access by firefighting equipment and to prevent the accumulation of water. No junk shall be piled to a height greater than eight (8) feet; the manner of storage of junk shall be arranged in such a fashion that aisles of a minimum width of 25 feet between rows of junk are maintained in order to facilitate access for fire-fighting;

DRAFT

9) Any salvage yard shall be maintained in such a manner so as not to cause, a public or private nuisance, offensive or noxious sounds or odors, breeding or harboring of rats, flies, mosquitoes, or other vectors of disease;

10) All junked vehicles shall be emptied of fuel, oil and other petroleum products, air conditioning fluid, anti-freeze and batteries;

11) No salvage yard shall be located on land with a slope in excess of eight percent (8%), or on prime agricultural soils, sinkhole prone soils, wetlands, woodlands, or floodplains;

12) The operator shall submit a storm water management plan that complies with the municipal storm water ordinance;

13) All mechanical equipment shall be screened from the view of adjoining properties;

14) All waste collection/storage areas shall be located at least fifty (50) feet from the nearest building and shall be enclosed by a solid masonry screen wall;

15) Must comply with all appropriate governmental agency regulations and laws;

16) The operator shall obtain a license from the Municipality prior to initiating operations and shall be renewable annually upon payment of the required license fee established from time to time by Resolution of the Municipal Council and subject to inspection by the Zoning Officer to determine continuing compliance with these standards; and

17) Salvage storage areas shall be a dust-free, all-weather surface such as asphalt, concrete or compacted gravel.

OOO. Self Storage

1) See: “Warehousing”.

PPP. Senior Housing

1) A traffic impact study shall be required;

2) Parking spaces shall be located no more than three hundred (300) feet from the primary entrance of the building;

3) Where two (2) or more buildings exist on the same lot, the minimum distance between buildings shall be twenty (20) feet or fifty percent (50%) of the height of the taller building, whichever is greater;

4) The primary vehicular entrance to the building shall have direct access to a public street;

5) A twenty (20)-foot wide fire/emergency access route shall be provided around the perimeter of each building;

DRAFT

6) All off-street parking areas adjacent to a single-family dwelling or property in any Residential Zoning District shall be screened by a minimum six (6) foot high compact evergreen hedge; and

7) All waste collection/storage areas shall be located at least fifty (50) feet from the nearest building and shall be enclosed by a solid masonry screen wall;

8) All mechanical equipment shall be screened from the view of adjoining properties;

9) Council shall require a covenant running with the land, in recordable form, providing that said Dwelling shall be used exclusively for Senior Housing;

10) In the event any Dwelling for Senior Housing is at any time and for any reason whatsoever not used exclusively for Senior Housing, then, and in that event, the parking requirements for the zoning district in which said Dwelling is located shall apply;

11) The Site Plan for any proposed Dwelling for Senior Housing shall include the Parking Spaces which the Developer will provide for the additional Parking Spaces that would be required if said Dwelling were not used exclusively for Senior Housing;

12) Alternate schemes for he required additional parking may be considered by Council upon the recommendation of the Planning Commission at the time and in the event said Dwelling is not to be used exclusively for Senior Housing provided that such alternate schemes meet the zoning requirements in effect at the time; and

13) Council shall further require a certificate of feasibility from the State or Federal agency guaranteeing the mortgage on any proposed Dwelling for Senior Housing stating that a market analysis for the proposed Dwelling has been completed and meets the requirements of said guaranteeing agency.

QQQ. Sexually Oriented Business

1) PURPOSE AND INTENT: It is the purpose of this ordinance to regulate sexually oriented businesses to promote the health, safety, and general welfare of the citizens of the Municipality, and to establish reasonable and uniform regulations to prevent the continued deleterious location and concentration of sexually oriented businesses within the Municipality. The provisions of this ordinance have neither the purpose nor effect of imposing a limitation or restriction on the content of any communicative materials, including sexually oriented materials. Similarly, it is not the intent nor effect of this ordinance to restrict or deny access by adults to sexually oriented materials protected by the First Amendment, or to deny access by the distributors and exhibitors of sexually oriented entertainment to their intended market. Neither is it the intent nor effect of this ordinance to condone or legitimize the distribution of obscene material.

2) CLASSIFICATION: Sexually oriented businesses are defined in Article II, Definitions, and are classified as follows:

a) Adult arcades

DRAFT

b) Adult bookstores or adult video stores

c) Adult cabarets

d) Adult motels

e) Adult motion picture theaters; Adult theaters

f) Escort agencies

g) Nude model studios

h) Sexual encounter centers.

3) PERMIT REQUIRED:

a) Any person who operates a sexually oriented business without a valid permit issued by the Municipality is guilty of a violation of the Zoning Ordinance;

b) An application for a permit to operate a sexually oriented business must be made on a form provided by the Zoning Officer. The application must be accompanied by a sketch or diagram showing the floor plan and plot plan configuration of the premises, including a statement of total floor space occupied by the business. The sketch or diagram need not be professionally prepared but must be drawn to a designated scale or drawn with marked dimensions of the interior of the premises to an accuracy of plus or minus six inches (6");

c) The applicant must be qualified according to the provisions of this section and the premises must be inspected and found to be in compliance with the law by the Zoning Officer, the Building Official and the Fire Official;

d) If a person who wishes to operate a sexually oriented business is an individual, that person must sign the application for a permit as applicant. If a person who wishes to operate a sexually oriented business is other than an individual, each individual who has a ten percent (10%) or greater interest in the business must sign the application for a permit as applicant. If a corporation is listed as owner of a sexually oriented business or as the entity which wishes to operate such a business, each individual having a direct or indirect interest of ten percent (10%) or greater in the corporation must sign the application for a permit as applicant;

e) The fact that a person possesses other types of Municipal permits does not exempt the person from the requirement of obtaining a sexually oriented business permit;

4) ISSUANCE OF PERMIT:

a) The Zoning Officer shall approve the issuance of a permit to an applicant within thirty (30) days after receipt of an application unless he finds one or more of the following to be true:

i. An applicant is under eighteen (18) years of age;

DRAFT

ii. An application or an applicant's spouse is overdue in the payment to the Municipality of taxes, fees, fines, or penalties assessed against him or imposed upon him in relation to a sexually oriented business;

iii. An applicant has failed to provide information reasonably necessary for issuance of the permit or has falsely answered a question or request for information on the application form;

iv. An applicant is residing with a person who has been denied a permit by the Municipality to operate a sexually oriented business within the preceding twelve (12) months, or residing with a person whose license to operate a sexually oriented business has been revoked within the preceding twelve (12) months;

v. The premises to be used for the sexually oriented business have been reviewed and have been disapproved by either the Zoning Officer, the Building Official and/or the Fire Official as not being in compliance with applicable laws and ordinances;

vi. The permit fee required by this ordinance has not been paid;

vii. An applicant of the proposed establishment is in violation of or is not in compliance with any of the provisions of this ordinance; and

viii. An individual applicant or any individual holding a direct or indirect interest of more than ten percent (10%) of a corporate applicant, or any of the officers and directors of a corporate applicant, if the applicant is a corporation; or any of the partners, including limited partners, if the application is a partnership; or the manager or other person in charge of the operation of the applicant's business, has or have been convicted of an offense involving sexual misconduct within the Commonwealth of Pennsylvania, including, but not limited to, prostitution, obscenity and possession of child pornography, or convicted of any offense in any jurisdiction other than the Commonwealth of Pennsylvania that would have constituted an offense involving sexual misconduct if committed within the Commonwealth of Pennsylvania. In order for approval to be denied pursuant to this subsection, the person or persons' conviction or release in connection with the sexual misconduct offense must have occurred within two (2) years of the date of application in the event of a misdemeanor and within five (5) years of the date of application in the event of a felony.

b) The permit, if granted, shall state on its face the name of the person or persons to whom it is granted, the expiration date, and the address of the sexually oriented business. The permit shall be posted in a conspicuous place at or near the entrance to the sexually oriented business so that it may be easily read at any time; and

c) The Zoning Officer, the Building Official, and Fire Official shall complete their certification that the premises are in compliance or not in compliance within twenty (20) days of receipt of the application by the Zoning Officer. The certification shall be promptly presented by the Zoning Officer.

DRAFT

5) INSPECTION:

a) An applicant, or permittee, shall permit representatives of the Police Department, Building Official, Fire Official, Zoning Officer, or other Municipal departments or agencies to inspect the premises of a sexually oriented business for the purpose of insuring compliance with the law, at any time that the sexually oriented business is occupied or open for business; and

b) A person who operates a sexually oriented business or his agent or employee violates the Zoning Ordinance if he refuses to permit such lawful inspection of the premises at any time it is occupied or open for business.

6) EXPIRATION OF PERMIT:

a) Each permit shall expire one (1) year from the date of issuance and may be renewed only by making application as provided in Section 704. Application for renewal should be made at least thirty (30) days before the expiration date and, when made fewer than thirty (30) days before the expiration date, the pendency of the application will not prevent the expiration of the permit; and

b) If the Zoning Officer denies renewal of a license, the applicant shall not be issued a permit for one (1) year from the date of denial, except that after ninety (90) days have elapsed since the date of denial, the applicant may be granted a permit if the Zoning Officer finds that the basis for denial of the renewal permit has been corrected or abated.

7) SUSPENSION OF PERMIT

a) The Zoning Officer shall suspend a permit for a period not to exceed thirty (30) days if he determines that a permittee or an employee of a permittee has:

i. Violated or is not in compliance with any section of this ordinance;

ii. Engaged in excessive use of alcoholic beverages while on the sexually oriented business premises or engaged in the use of illegal narcotics;

iii. Refused to allow an inspection of the sexually oriented business premises as authorized by this chapter;

iv. Knowingly permitted gambling by any person on the sexually oriented business premises; and

v. Failed to man managers' stations and/or maintain viewing rooms as set forth in Section 29).d).

8) REVOCATION OF PERMIT

DRAFT

a) The Zoning Officer shall revoke a permit if a cause of suspension set forth in Section 708 occurs and the permit has been suspended within the preceding twelve (12) months.

b) The Zoning Officer shall revoke a permit if he determines that:

c) A permittee, or any of the persons specified in Section 504.EEEE.8)h), is or has been convicted of the offenses specified in Section 504.EEEE.8)h);

d) A permittee gave false or misleading information in the material submitted to the Municipality during the application process;

e) A permittee or an employee of a permittee has knowingly allowed possession, use, or sale of controlled substances on the premises;

f) A permittee or an employee of a permittee has knowingly allowed prostitution on the premises;

g) A permittee or an employee of a permittee knowingly operated the sexually oriented business during a period of time when the permittee's permit was suspended;

h) A permittee or an employee of a permittee has knowingly allowed any act of sexual intercourse, sodomy, oral copulation, masturbation, or other explicit sexual conduct to occur in or on the permitted premises; and

i) A permittee is delinquent in payment to the Municipality or State of any taxes or fees relating to sexually oriented business.

j) When the Zoning Officer revokes a permit, the revocation shall continue for one (1) year, and the permittee shall not be issued a sexually oriented business permit for one (1) year from the date revocation became effective, except that if the revocation is pursuant to Section 709(B)(i) above, the revocation shall be effective for two (2) years in the event of a misdemeanor or five (5) years in the case of a felony; and

k) After denial of an application, or denial of a renewal of an application, or suspension or revocation of a permit, the application or licensee or permittee shall have the right to appeal said action and to seek prompt judicial review of such administrative action in any court of competent jurisdiction.

9) TRANSFER OF PERMIT

a) A permittee shall not transfer his permit to another person. A permittee shall not operate a sexually oriented business under the authority of a permit at any place other than the address designated in the application.

10) LOCATION OF SEXUALLY ORIENTED BUSINESSES

a) A person is guilty of a violation of the Zoning Ordinance if he operates or causes to be operated a sexually oriented business outside of the district in which a sexually oriented business is a conditional use. No sexually oriented businesses shall be located outside a district in which a sexually

DRAFT

oriented business is a conditional use. Sexually oriented businesses as defined herein shall be permitted in an M-2, Industrial Zoning District, as a Conditional Use;

b) A person is guilty of a violation of the Zoning Ordinance if he operates or causes to be operated a sexually oriented business within one thousand and five-hundred feet (1,500') of:

i. a church;

ii. a public or private pre-elementary, elementary, or secondary school;

iii. a public library;

iv. a child-oriented business;

v. a child care facility or nursery school; and

vi. a public park adjacent to any residential district.

c) A person is guilty of a violation of the Zoning Ordinance if he causes or permits the operation, establishment, substantial enlargement, or transfer of ownership or control of a sexually oriented business within five thousand feet (5,000') of another sexually oriented business;

d) A person is guilty of a violation of the Zoning Ordinance if he causes or permits the operation, establishment, or maintenance of more than one (1) sexually oriented business in the same building, structure, or portion thereof; or the increase of floor areas of any sexually oriented business in any building, structure, or portion thereof containing another sexually oriented business;

e) For the purpose of this ordinance, measurement shall be made in a straight line, without regard to intervening structures or objects, from the nearest portion of the building or structure used as a part of the premises where a sexually oriented business is conducted, to the nearest property line of the premises of a church, public or private pre-elementary, elementary, or secondary school, public library, child care facility, or nursery school; or to the nearest boundary of an affected public park;

f) For purposes of Subsection 23 of this section, the distance between any two (2) sexually oriented businesses shall be measured in a straight line, without regard to intervening structures or objects, from the closest exterior wall of the structure in which each business is located;

g) Any sexually oriented business lawfully operating on date of enactment of this Ordinance that is in violation of Subsections 21 through 29 of this section shall be deemed a nonconforming use. Such nonconforming uses shall not be increased, enlarged, extended or altered, except that the use may be changed to a conforming use. In the event that two (2) or more sexually oriented businesses are within five thousand feet (5,000') of one another and otherwise in a permissible location, the sexually oriented business which was first established and continually operating at a

DRAFT

particular location is the conforming use and the later-established business is nonconforming; and

h) A sexually oriented business lawfully operating as a conforming use is not rendered a nonconforming use by the location, subsequent to the grant or renewal of the sexually oriented business permit, of a church, public or private pre-elementary, elementary, or secondary school, public library, child care facility, nursery school or public park within one thousand, five-hundred feet (1,500') of the sexually oriented business. This provision applies only to the renewal of a valid permit, and does not apply when an application for a permit is submitted after a permit has expired or has been revoked.

11) REGULATIONS PERTAINING TO EXHIBITION OF SEXUALLY EXPLICIT FILMS OR VIDEOS

a) A person who operates or causes to be operated a sexually oriented business, other than an adult motel, which exhibits on the premises in a viewing room of fewer than one hundred fifty (150) square feet of floor space, a film or videocassette, or other video or other image production or reproduction which depicts "specified sexual activities" or "specified anatomical areas", shall comply with the following requirements:

i. The application for a permit to operate a sexually oriented business shall be accompanied by a floor plan and plot plan diagram of the premises showing a plan thereof specifying the location of one (1) or more manager's stations, the location of all viewing rooms, partitions and doors and the location of all overhead lighting fixtures and designating any portion of the premises in which patrons will not be permitted. A manager's station may not exceed thirty-two (32) square feet of floor area. The diagram shall also designate the place at which the permit will be conspicuously posted, if granted. A professionally prepared diagram in the nature of an engineer's or architect's blueprint shall not be required; however, each diagram should be oriented to the north or to some designated street or dimensions sufficient to show the various internal dimensions of all areas of the interior of the premises to an accuracy of plus or minus six (6") inches. The Zoning Officer may waive the foregoing diagram for renewal applications if the applicant adopts a diagram that was previously submitted and certifies that the configuration of the premises has not been altered since it was prepared;

ii. The application shall be sworn to be true and correct by the applicant;

iii. No alteration in the configuration or location of a manager's station may be made without the prior approval of the Zoning Officer or designee;

iv. It is the duty of the owners and operators of the premises to ensure that at least one (1) employee is on duty and situated in each manager's station at all times that any patron is present inside the premises;

DRAFT

v. The interior of the premises shall be configured in such a manner that there is an unobstructed view from a manager's station of every area of the premises to which any patron is permitted access for any purpose, excluding rest rooms. Rest rooms may not contain video reproduction or viewing equipment. If the premises has two (2) or more manager's stations designated, then the interior of the premises shall be configured in such a manner that there is an unobstructed view of each area of the premises to which any patron is permitted access for any purpose from at least one (1) of the manager's stations. The view required in this subsection must be by direct line of sight from the manager's station;

vi. It shall be the duty of the owners and operators, and it shall also be the duty of any agents and employees present on the premises to ensure that the view as specified in Subsection v. remains unobstructed by any doors, walls, merchandise, display racks or other materials at all times and to ensure that no patron is permitted access to any area of the premises which has been designated as an area in which patrons will not be permitted in the application filed pursuant to Subsection i. of this section;

vii. No viewing room may be occupied by more than one (1) person at any time. No connections or openings to an adjoining viewing room shall be permitted;

viii. The premises shall be equipped with overhead lighting fixtures of sufficient intensity to illuminate every place to which patrons are permitted access at an illumination of not fewer than one (1) foot candle as measured at the floor level; and

ix. It shall be the duty of the owners and operators and it shall also be the duty of any agents and employees present in the premises to ensure that the illumination described above is maintained at all times that any patron is present in the premises;

b) A person having a duty under Subsection i. through ix. of Subsection A is guilty of a violation of the Zoning Ordinance if he knowingly fails to fulfill that duty.

12) EXEMPTIONS

a) It is a defense to prosecution under Section *"ISSUANCE OF PERMIT"* and Section *"LOCATION OF SEXUALLY ORIENTED BUSINESS"* that a person appearing in a state of nudity did so in a modeling class operated:

1) By a proprietary school, licensed by the Commonwealth of Pennsylvania, or a college, junior college, or university supported entirely or partly by taxation;

2) By a private college or university which maintains and operates educational programs in which credits are transferable to a college, junior college, or university supported entirely or partly by taxation; or

3) In a structure:

i. Which has no sign visible from the exterior of the structure and no other advertising that indicates a nude person is available for viewing;

ii. Where, in order to participate in a class, a student must enroll at lease three (3) days in advance of the class; and

iii. Where no more than one (1) nude model is on the premises at any one (1) time.

13) INJUNCTION

a) A person who operates or causes to be operated a sexually oriented business without a valid permit or in violation of this ordinance is subject to an action in equity or a suit for injunction as well as citations for violations of the Zoning Ordinance.

14) EXISTING SEXUALLY ORIENTED BUSINESSES:

a) Any existing business that would qualify under this ordinance shall have one (1) year from the time of enactment to come into compliance with this ordinance.

RRR. Shopping Center

1) A traffic impact study shall be required;

2) Shall be located on lots with a minimum of five (5) acres in size; shall have side and rear yards of not less than twenty (20) feet when abutting non-residential zoning districts, and fifty (50) feet when abutting any R or S zoning district;

3) The entire shopping center shall have a common architectural character and be an integrated design;

4) Ingress, egress, and internal traffic circulation shall be designed to minimize congestion during peak usage of the facility;

5) Adequate provisions shall be made for safe and efficient pedestrian and vehicular traffic circulation within the boundaries of the shopping center. Such provisions shall include raised curbs or medial walkways which shall prohibit vehicles from straying from their designated circulation routes. Also, these walkways shall be suitably planted to help reinforce the proper routing of traffic and add to the overall appearance of the shopping center;

6) A landscaped strip shall screen all property lines, which adjoin residential uses or residential zoning districts, at least fifty (50) feet in depth, which shall be comprised of a combination of high level and low-level plantings. Such screening shall be a minimum of six (6) feet in height for high level and two (2) feet in height for low level plants at the time of installation. Existing vegetation shall be used to meet these criteria at the discretion of the Municipality;

DRAFT

7) No direct beams or rays of light from exterior lighting fixtures, signs or vehicles maneuvering on the development site, shall be permitted to shine into the private living areas and associated open spaces of adjacent residential properties;

8) Location of buildings and structures, traffic circulation, and parking lots shall be designed to provide adequate access for emergency medical vehicles and firefighting equipment;

9) All mechanical equipment shall be screened from the view of adjoining properties;

10) All waste collection/storage areas shall be located at least fifty (50) feet from the nearest building and shall be enclosed by a solid masonry screen wall;

11) Loading berths shall be regulated by §907;

12) Areas not paved or occupied by structures shall be landscaped. A landscaping plan, prepared by a Landscape Architect registered in the Commonwealth of Pennsylvania, shall be submitted; and

13) Areas used for outdoor sales shall be designed not to interfere with pedestrian circulation areas or in required parking areas.

SSS. Single-Family Residential (in the Mixed Use)

1) The mixing of residential uses with office and/or commercial uses is encouraged within the Mixed-Use Overlay Districts;

2) Required off-street parking shall be computed separately for each of the uses incorporated into the mixed use project;

3) A screen, not less than six feet in height, shall be erected along the common lot line between a residential use and non-residential use. Screening treatments shall be subject to the review and approval by the Municipality;

4) All permanently undeveloped portions of the site shall be planted with grass, ground cover, shrubbery, or other suitable live plant material, which shall extend to any developed pavement edge. Existing plant material on the property may be used; and

5) Foundation plantings are encouraged along the front or sides of any building which faces a public or private road or is adjacent to a parking lot or other area which provides access to the building by the general public. Foundation planting areas should be integrated into any existing sidewalk system between the front or sides of the building and the parking area (and/or associated driveways) adjacent to the building.

6) All mechanical equipment shall be screened from the view of adjoining properties; and

7) All waste collection/storage areas shall be located at least fifty (50) feet from the nearest building and shall be enclosed by a solid masonry screen wall.

TTT. Skilled Nursing Facility Also see: *"Assisted Living Facility", "Continuing Care Facility", "Hospice", "Nursing Home Facility", "Personal Care Home Facility".*

DRAFT

1) A traffic impact study shall be required;

2) A Skilled Nursing Facility shall be located on property, which consists of one or more Lots and contains a minimum of one (1) acre. If more than one Lot or parcel is used, they must be contiguous. Skilled Nursing Facilities occupying more than one Lot or parcel shall obtain Subdivision approval consolidating such Lots;

3) All structures shall be set back a minimum of forty (40) feet from all property lines;

4) The site shall have frontage on and direct vehicular access to a public road;

5) Shall not be approved unless plans prepared by an architect or engineer are submitted which clearly indicate that adequate light, ventilation and fireproofing are provided;

6) The dwelling facility and its accommodations shall be functional and convenient with regard to the specific needs of the group to be housed in the facility;

7) Shall be approved only after Council has found that plans and programs for management of the dwelling are adequate and appropriate to the population to be housed and that adequate provisions have been made to assure the safety and welfare of the residents of the facility and of the adjacent neighborhood;

8) All mechanical equipment shall be screened from the view of adjoining properties;

9) All waste collection/storage areas shall be located at least fifty (50) feet from the nearest building and shall be enclosed by a solid masonry screen wall;

10) The Lot Coverage by all Principal and Accessory Buildings shall not exceed forty percent (40%);

11) Ingress, egress, and internal traffic circulation shall be designed to ensure access by emergency vehicles;

12) The parking and circulation plan shall be referred to the Fire Official for comments regarding traffic safety and emergency access;

13) The applicant shall file a detailed statement of intent describing the proposed use of the building, in which the statement shall detail the proposed number and nature of the anticipated occupants;

14) Shall be in compliance with the Pennsylvania Department of Health, Department of Public Welfare, and Department of Mental Health standards applicable at the time of issue of license, and with the latest revision of licensing requirements. A license or certification shall be obtained from all appropriate governmental agencies prior to the issuance of an occupancy permit

15) A Certificate of Occupancy shall be required before any Unit may be occupied;

16) Any change in the conditions of original approval shall constitute a new use and the full procedure for obtaining approval of the conditional use shall be required.

DRAFT

UUU. Solar Energy Facility (Solar Photovoltaic Systems), Principal Use—Also see: Solar Energy Facility, Accessory to Principal Use – Article VIII Section 822

1) The applicant shall demonstrate through project planning and proposed mitigation that proposed system visual impacts will be minimized for surrounding properties and the community. This may include, but are not to be limited to information regarding site selection, system design or appearance, buffer yards and screening of ground mounted electrical and control equipment;

2) Where the installation of the system constitutes a land development, the applicant shall apply for, and receive land development approval pursuant to the Subdivision and Land Development Ordinance;

3) Noise from any system shall not exceed fifty (50) decibels at the lot line adjacent to a lot in a non-residential zoning district and fifteen (15) decibels at the lot line adjacent to a lot in a residential zoning district, unless the adjacent property owner shall have executed a non-disturbance easement, covenant, or consent which has been recorded in the Allegheny County Department of Real Estate or its successor agency. The decibel measurement shall be taken at the exterior of any occupied structure on any property other than that occupied by the system. Methods for measuring and reporting acoustic emissions from the system shall be equal to or exceed the minimum standards for precision described in AWEA Standard 2.1 – 1989 titled *Procedures for the Measurement and Reporting of Acoustic Emissions from Wind Turbine Generation Systems Volume I: First Tier*;

4) Construction of any system shall comply with all rules, laws and regulations of the Federal Aviation Administration. Documentation of compliance shall be provided to the Municipality;

5) To the extent applicable, any system shall comply with the state Uniform Construction Code and the regulations adopted by the state Department of Labor and Industry;

6) All electrical components of systems shall conform to relevant and applicable local, state and national codes, and relevant and applicable international standards;

7) Systems shall not be artificially lit, except to the extent required by the Federal Aviation Administration or other applicable authority that regulates air safety;

8) Systems shall not display advertising, except for reasonable identification of the facility manufacturer;

9) Transmission and power lines shall be placed underground or out of sight;

10) The following project information shall be submitted to the Municipality for every proposed solar photovoltaic system:

    a) Project narrative including the following: an overview of the project, project location, the approximate generating capacity, the number, representative types and heights of systems to be constructed, including their generating capacity, dimensions, and respective manufacturers, and description of any ancillary facilities to the solar photovoltaic system;

DRAFT

b) An affidavit or similar evidence of agreement between the property owner and the solar photovoltaic system owner or operator, demonstrating permission to apply for necessary permits for construction and operation of a solar photovoltaic system;

c) Identification of the properties on which the proposed system will be located and the properties adjacent to the proposed location;

d) A site plan showing the planned location of each proposed solar photovoltaic system, property lines, setback lines, access roads and the location of any ancillary structures, including equipment, cabling, buildings, structures, transmission lines, and substations;

e) A view shed impact analysis, illustrating views of the proposed system, from multiple angles;

f) A design certification by a certified engineer, consisting of the proposed foundation design and analysis of soil conditions;

11) Land development approval pursuant to the Municipal Subdivision and Land Development Ordinance, shall be required for the construction of any solar photovoltaic system when it is used as the principal use on a site or lot;

12) All solar photovoltaic systems and any associated accessory equipment shall comply with all area, dimensional, and yard setbacks for the zoning district in which the system is located, as well as any other zoning provisions that apply, including buffer yards and landscaping. Required landscape buffer yards may be modified so that tall tree species may be replaced with lower-growing tree species where the required tree species may interfere with the functioning of the solar photovoltaic system, only where the required landscape buffer yard is adjacent to property where non-residential uses are permitted; and

13) Secure perimeter fencing shall be installed around the solar photovoltaic system. The fencing shall not be constructed within any required landscape buffer yard or setback.

14) Any upgrade, modification or structural change that materially alters the size or placement of an existing solar photovoltaic systems shall comply with the provisions of this ordinance;

15) Building-mounted and ground-mounted solar photovoltaic systems are permitted in all zoning districts as an accessory use to any lawfully permitted principal use on the same lot upon issuance of the proper permit pursuant to Section 207 of Ordinance 1443 and upon compliance with all requirements of this section and elsewhere specified in this Ordinance;

16) Building-mounted systems are permitted to face any rear, side and front yard or any unregulated yard area as defined in Section 1 of this Ordinance. Building-mounted systems may only be mounted on lawfully permitted principal or accessory structures;

17) Ground-mounted systems are permitted based on the requirements for accessory uses or structures in the property's zoning district.

DRAFT

18) Design and Installation Standards:

a) The solar PV system must be constructed to comply with the Pennsylvania Uniform Construction Code (UCC), Act 45 of 1999, as amended, and any regulations adopted by the Pennsylvania Department of Labor and Industry as they relate to the UCC, except where an applicable industry standard has been approved by the Pennsylvania Department of Labor and Industry under its regulatory authority;

b) All wiring must comply with the National Electrical Code, most recent edition, as amended and adopted by the Commonwealth of Pennsylvania;

c) For ground-mounted systems, all exterior electrical lines must be buried below the surface of the ground where possible or be placed in conduit;

d) The solar PV system must be constructed to comply with the most recent fire code as amended and adopted by the Commonwealth of Pennsylvania;

19) Setback Requirements:

a) Ground-mounted systems. Ground-mounted systems are subject to the accessory use or structure setback requirements in the zoning district in which the system is to be constructed. The required setbacks are measured from the lot line to the nearest part of the system. No part of the ground-mounted system shall extend into the required setbacks due to a tracking system or other adjustment of solar PV related equipment or parts.

20) Height Restrictions:

a) Notwithstanding the height limitations of the zoning district:

i. For a building-mounted system installed on a sloped roof that faces the front yard of a lot the system must be installed at the same angle as the roof on which it is installed with a maximum distance, measured perpendicular to the roof, of eighteen (18) inches between the roof and highest edge or surface of the system;

ii. For a building-mounted system installed on a sloped roof, the highest point of the system shall not exceed the highest point of the roof to which it is attached;

iii. For a building-mounted system installed on a flat roof, the highest point of the system shall be permitted to extend up to six (6) feet above the roof to which it is attached.

b) Ground-mounted systems may not exceed the permitted height of accessory structures in the zoning district where the solar PV system is to be installed.

DRAFT

21) Screening and Visibility:

a) Building-mounted systems on a sloped roof shall not be required to be screened;

b) Building-mounted systems mounted on a flat roof shall not be visible from the public right-of-way within a forty (40) foot radius of the property, exclusive of an alley as defined by this Ordinance, at a level of five (5) feet from the ground in a similar manner as to any other rooftop HVAC or mechanical equipment. This can be accomplished with architectural screening such as a building parapet or by setting the system back from the roof edge in such a manner that the solar PV system is not visible from the public right-of-way within a forty (40) foot radius when measured at a distance of five (5) feet from the ground.

22) Impervious Lot Coverage Restrictions:

a) The surface area of any ground-mounted system, regardless of the mounted angle of any portion of the system, is considered impervious surface and shall be calculated as part of the property lot coverage limitations for the zoning district. If the ground-mounted system is mounted above existing impervious surface, it shall not be calculated as part of the property lot coverage limitations for the zoning district.

23) Nonconformance:

a) Building-mounted systems:

i. If a building-mounted system is to be installed on any building or structure that is nonconforming because its height violates the height restrictions of the zoning district in which it is located, the building-mounted system shall be permitted so long as the building-mounted system does not extend above the peak or highest point of the roof to which it is mounted and so long as it complies with the other provisions of this Ordinance; and

ii. If a building-mounted system is to be installed on a building or structure on a nonconforming lot that does not meet the minimum setbacks required and/or exceeds the lot coverage limits for the zoning district in which it is located, a building-mounted system shall be permitted so long as there is no expansion of any setback or lot coverage nonconformity and so long as it complies with the other provisions of this Ordinance.

b) Ground-mounted systems:

i. If a ground-mounted system is to be installed on a lot containing a structure that is nonconforming because the required minimum setbacks are exceeded, the proposed system shall be permitted so long as the system does not encroach into the established setback for the lot. If a ground-mounted system is to be installed on a lot that is nonconforming because it violates zoning district

DRAFT

requirements other than setbacks, then a variance must be obtained for the proposed installation.

24) Signage and/ or Graphic Content:

a) No signage or graphic content may be displayed on the solar PV system except the manufacturer's badge, safety information and equipment specification information. Said information shall be depicted within an area no more than thirty-six (36) square inches in size.

25) Performance Requirements:

a) All solar PV systems are subject to compliance with applicable performance standards detailed elsewhere in the Zoning Ordinance.

26) Inspection, Safety and Removal:

a) The Municipality reserves the right to inspect a solar PV system for building or fire code compliance and safety.

i. If upon inspection the Municipality determines that a fire code or building code violation exists, or that the system otherwise poses a safety hazard to persons or property, the Municipality may order the owner/property owner/landowner/facility owner/operator to repair or remove the system within a reasonable time. Such an order shall be in writing, shall offer the option to repair, shall specify the code violation or safety hazard found and shall notify the owner/property owner/land owner/facility owner/operator of his or her right to appeal such determination;

ii. If a owner/property owner/land owner/facility owner/operator fails to repair or remove a solar PV system as ordered, and any appeal rights have been exhausted, the Municipality may enter the structure/property, remove the system and charge the owner/property owner/land owner/facility owner/operator for all costs and expenses of removal, including reasonable attorney's fees or pursue other legal action to have the system removed at the owner/property owner/land owner/facility owner/operator's expense; and

iii. In addition to any other available remedies, any unpaid costs resulting from the Municipality's removal of a vacated abandoned or de-commissioned solar PV system shall constitute a lien upon the property against which the costs were charged. Legal counsel of the Municipality shall institute appropriate action for the recovery of such cost, plus attorney's fees, including, but not limited to filing of municipal claims pursuant to 53 P.S.7107, et seq., for the cost of such work, 6% interest per annum, plus a penalty of 5% of the amount due plus attorney's fees and costs incurred by the Municipality in connection with the removal work and the filing of the Municipality claim.

27) Permit Requirements:

DRAFT

a) Before any construction or installation on any solar PV system shall commence, a permit issued by Municipality of Monroeville shall be obtained to document compliance with this Ordinance.

VVV. Sports Facility

1) See: *"Athletic Facility", "Day Spa", "Fitness Center", "Gymnasium", "Membership Club", "Recreational Facility".*

WWW. Substance Abuse Treatment Facility

1) A traffic impact study and a parking demand analysis shall be required;

2) The facility must be licensed by all appropriate governmental agencies. Said valid license and all appropriate documentation shall be submitted to the Municipality prior to the issuance of the occupancy certificate;

3) The facility must comply with all applicable Fire, Housing, Building, Property Maintenance, and Health Codes, and all regulations pertaining to transient occupancy with respect to emergency lighting, smoke detectors, exit lights, and other safety devices;

4) Any food preparation, service, or distribution shall be licensed and inspected;

5) A Substance Abuse Treatment Facility shall have frontage on and direct access to a public road;

6) For any building (or portion thereof) which is proposed to contain a Substance Abuse Treatment Facility, the lot upon which such building (or portion thereof) sits shall not be located closer than 500 feet to a lot utilized for an existing school, public playground, public park, residential housing area, residential lot, single-family dwelling, child care facility, church, meeting house or other actual place of regularly scheduled religious worship established prior to the proposed substance abuse treatment (Reference the Municipalities Planning Code, Section 621);

7) All buildings proposed to contain a Substance Abuse Treatment Facility shall fully comply with the requirements of the then current edition of the International Building Code (IBC);

8) All waste collection/storage areas shall be located at least fifty (50) feet from the nearest building and shall be enclosed by a solid masonry screen wall;

9) All mechanical equipment shall be screened from the view of adjoining properties;

10) No direct beams or rays of light from exterior lighting fixtures, signs or vehicles maneuvering on the development site, shall be permitted to shine into the private living areas and associated open spaces of adjacent residential properties;

11) In addition to the otherwise required number of parking spaces specified by Article IX of this ordinance for the usage of the building proposed for a Substance Abuse Treatment Facility, additional parking shall be required specifically for the Substance Abuse Treatment Facility at a rate of one additional parking space for each 200 feet of area devoted to the Substance Abuse Treatment Facility;

DRAFT

12) Each building or portion thereof proposed for use as a Substance Abuse Treatment Facility shall have a separate and distinct entrance utilized solely for direct entrance into the Substance Abuse Treatment Facility. Such separate and distinct entrance shall face a public road. Access to the Substance Abuse Treatment Facility shall not be permitted via a shared building entrance or from a shared interior corridor within the building in which it is located; and

13) Signage for the Substance Abuse Treatment Facility shall fully comply with Article X, which establishes sign regulations for the Municipality.

XXX. Swimming Pools

1) Community or club swimming pools, public:

a) A community or club swimming pool shall be any pool constructed by an association of property owners or by a private club for the use and enjoyment by members of the association or the club and their families and guests;

b) Community and club swimming pools shall comply with the following additional conditions and requirements:

i. The pool and any accessory structures thereto, and any lounging areas used by the bathers, shall not be closer than 50 feet to any adjacent lot line; and

ii. Reference the International Building Code for fencing requirements. For example: a fence six feet in height, and this fence shall be locked at all times when the pool is unattended.

YYY. Tattoo Parlor/Body Piercing Studio

1) A tattoo parlor and/or body-piercing studio shall meet all requirements of all appropriate governmental agencies.

2) The valid license and all appropriate documentation shall be submitted to the Municipality prior to the issuance of the occupancy certificate;

3) The facility shall have frontage on and direct access to a public road;

4) For any building (or portion thereof) which is proposed to contain a Tattoo Parlor/Body Piercing Studio, the lot upon which such building (or portion thereof) sits shall not be located closer than 500 feet to a lot utilized for an existing school, public playground, public park, residential housing area, residential lot, single-family dwelling, child care facility, church, meeting house or other actual place of regularly scheduled religious worship established prior to the proposed substance abuse treatment;

5) All buildings proposed to contain a Tattoo Parlor/Body Piercing Studio shall fully comply with the requirements of the then current edition of the International Building Code (IBC);

6) All mechanical equipment shall be screened from the view of adjoining properties;

DRAFT

7) All waste collection/storage areas shall be located at least fifty (50) feet from the nearest building and shall be enclosed by a solid masonry screen wall;

8) Outdoor speakers shall be permitted for emergency announcements only;

9) Each building or portion thereof proposed for use as a Tattoo Parlor/Body Piercing Studio shall have a separate and distinct entrance utilized solely for direct entrance into the Tattoo Parlor/Body Piercing Studio. Such separate and distinct entrance shall face a public road. Access to the Tattoo Parlor/Body Piercing Studio shall not be permitted via a shared building entrance or from a shared interior corridor within the building in which it is located; and

10) Signage for the Tattoo Parlor/Body Piercing Studio shall fully comply with Article X, which establishes sign regulations for the Municipality.

ZZZ. Therapeutic Massage Facility

1) A traffic impact study and a parking demand analysis shall be required;

2) The facility must be licensed by all appropriate governmental agencies. Said valid license and all appropriate documentation shall be submitted to the Municipality prior to the issuance of the occupancy certificate;

3) A Therapeutic Massage Facility shall have frontage on and direct access to a public road;

4) All waste collection/storage areas shall be located at least fifty (50) feet from the nearest building and shall be enclosed by a solid masonry screen wall;

5) All mechanical equipment shall be screened from the view of adjoining properties;

6) For any building (or portion thereof) which is proposed to contain a Therapeutic Massage Facility the lot upon which such building (or portion thereof) sits shall not be located closer than 500 feet to a lot utilized for an existing school, public playground, public park, residential housing area, residential lot, single-family dwelling, child care facility, church, meeting house or other actual place of regularly scheduled religious worship established prior to the proposed substance abuse treatment;

7) All buildings proposed to contain a Therapeutic Massage Facility shall fully comply with the requirements of the then current edition of the International Building Code (IBC); and

8) Signage for the Therapeutic Massage Facility shall fully comply with Article X, which establishes sign regulations for the Municipality.

AAAA. Tiny Home

1) The Tiny Home shall have a minimum of 150 square foot and a maximum 400 square foot of habitable floor area;

2) The Tiny Home must be served by water and sewer. Connection to public water and/or sewer shall conform to the regulations of the Authority responsible for each

DRAFT

utility. If public water and/or sewer is unavailable, the Tiny Home shall be physically connected to a sewage disposal and water supply system that does not exceed the total number of occupant's maximum capabilities for which the system was designed. Any connection to and/or expansion of an individual on-lot sewage disposal system shall be reviewed by the (Designated Township Position) and the applicant shall present evidence of such review and all necessary approvals;

3) The Tiny Home shall provide one (1) off-street parking space;

4) The maximum density of the underlying Zoning District may not be exceeded;

5) The setback requirements as a principal or accessory use of the underlying Zoning District shall be met;

6) All mechanical equipment shall be screened from the view of adjoining properties; and

7) All waste collection/storage areas shall be located at least fifty (50) feet from the nearest building and shall be enclosed by a solid masonry screen wall.

BBBB. Townhouse

1) A traffic impact study shall be required;

2) Parking spaces shall be located no more than one hundred (100) feet from the primary entrance of the building;

3) All off-street parking spaces, except spaces on driveways immediately in front of a carport or garage entrance, shall be set back a minimum of ten (10) feet from any dwelling;

4) Where two (2) or more buildings exist on the same lot, the minimum distance between buildings shall be twenty (20) feet or fifty percent (50%) of the height of the taller building, whichever is greater;

5) The maximum number of dwelling units in any townhouse building shall be five (5);

6) The primary vehicular entrance to the townhouse shall have direct access to a public street;

7) All mechanical equipment shall be screened from the view of adjoining properties;

8) Any mailboxes provided within the street right-of-way should be clustered together in an orderly and attractive arrangement or structure. Individual freestanding mailboxes of non-coordinated types at the curbside are discouraged;

9) All off-street parking areas adjacent to a single-family dwelling or property in any Residential Zoning District shall be screened by a minimum six (6) foot high compact evergreen hedge; and

DRAFT

10) All waste collection/storage areas shall be located at least fifty (50) feet from the nearest building and shall be enclosed by a solid masonry screen wall.

CCCC. Two-Family Home (Duplex)

1) A traffic impact study shall be required;

2) Parking spaces shall be located no more than one hundred (100) feet from the primary entrance of the building;

3) Where two (2) or more buildings exist on the same lot, the minimum distance between buildings shall be twenty (20) feet or fifty percent (50%) of the height of the taller building, whichever is greater;

4) The primary vehicular entrance to the two-family home shall have direct access to a public street;

5) All mechanical equipment shall be screened from the view of adjoining properties;

6) All off-street parking areas adjacent to a single-family dwelling or property in any Residential Zoning District shall be screened by a minimum six (6) foot high compact evergreen hedge; and

7) All waste collection/storage areas shall be located at least fifty (50) feet from the nearest building and shall be enclosed by a solid masonry screen wall.

DDDD. Utility Substation

1) Utility Substations shall provide proper separation and protection for abutting property;

2) All mechanical equipment shall be screened from the view of adjoining properties; and

3) Shall not require routine trucking movements on local residential or substandard streets.

EEEE. Vehicle Leasing/Rental or Sales

1) A traffic impact and parking analysis study shall be required;

2) Minimum lot area shall be one-half (1/2) acre;

3) The business shall include a permanent building, of not less than two thousand and five hundred (2,500) square feet,

4) All side and rear yards shall be a minimum of fifteen (15) feet and fifty (50) feet, respectively when abutting a residentially zoned district;

5) All automatic or self-serve vehicle washing operations, shall comply with §504. HHHH

DRAFT

6) All fuel, oil, other flammable substances, associated ventilation equipment and charging stations shall be stored or located at least fifty (50) feet from any lot line;

7) There shall be no parking of tractors and or trailers in excess of forty-eight (48) hours;

8) The areas where the vehicles are displayed shall be paved with a concrete product or asphalt;

9) Strings of lighting, flags, flashers, or similar paraphernalia shall not be permitted;

10) All mechanical equipment shall be screened from the view of adjoining properties;

11) All waste collection/storage areas shall be located at least fifty (50) feet from the nearest building and shall be enclosed by a solid masonry screen wall;

12) Outdoor speakers shall be permitted for emergency announcements only;

13) No repairs, other than minor repairs, shall be performed on the Premises and any such minor repairs shall be performed only within the Principal Building on the Premises; and

14) Outdoor Vehicle Storage areas that are accessible to the public shall be surfaced with an asphalt or portland cement binder pavement providing an all-weather, durable and dustless surface and shall be graded and drained to dispose of surface water accumulation by means of a positive stormwater drainage system.

FFFF. Vehicle Repair Service Garage

1) A traffic impact study shall be required;

2) All vehicles located on the property and awaiting repairs shall be subject to an active work order;

3) All service and/or repair activities shall be conducted within an enclosed principal building on the property;

4) All permanent storage of material, merchandise and equipment shall be within the principal building;

5) No outdoor storage of parts, equipment, lubricants, fuel or other material used or discarded as part of the service or repair operations, shall be permitted unless enclosed in a fenced in area;

6) Any used tires kept on the premises shall be stored inside or screened and removed from the property at regular intervals and shall not exceed fifty (50) in number at any time;

7) Sufficient screening shall be provided along all lot lines abutting or adjacent to residentially zoned or developed property to block any view of repair operations and stored material and equipment from all points on such residential property when viewed from ground level;

DRAFT

8) Accessory renting/leasing of vehicles shall be allowed provided they do not:

   a) Occupy more than ten percent (10%) of the lot size; and

   b) Occupy the required parking spaces.

9) The burning of fuel or crank oils, tires or similar materials, gas and combustible liquids as defined in the most recent adopted edition of the IFC and the IMC shall not be permitted;

10) All mechanical equipment shall be screened from the view of adjoining properties;

11) All waste collection/storage areas shall be located at least fifty (50) feet from the nearest building and shall be enclosed by a solid masonry screen wall;

12) Outdoor speakers shall be permitted for emergency announcements only;

13) The demolition or junking of vehicles and machinery is prohibited. Demolished vehicles or parts thereof shall be removed from the site within two (2) weeks of arrival;

14) Any ventilation equipment outlets associated with the servicing/repair work area(s) shall not be directed towards any adjoining property; and

15) The applicant shall furnish evidence that the storage and disposal of materials will be accomplished in a manner that complies with all applicable governmental agency regulations and laws.

GGGG. Vehicle Sales Area

1) See: *"Vehicle Leasing/Rental or Sales".*

HHHH. Vehicle Salesroom

1) See: *"Vehicle Leasing/Rental or Sales".*

IIII. Vehicle Wash, Automatic or Self-Serve

1) A traffic impact study shall be required;

2) Traffic flow and ingress-egress shall not cause traffic hazards on adjacent streets. On-lot traffic circulation channels and parking areas shall be clearly marked;

3) All automated washing facilities shall be in a completely enclosed building. All other vehicle washing facilities shall be under a roofed structure which has at least two (2) walls;

4) No washing, vacuuming, steam cleaning, waxing, polishing or machine drying operation, and no building within which such operations are conducted, shall be permitted within 100 feet of any residential district;

5) Drainage water from the washing operation shall be controlled so that it does not flow or drain onto berms, sidewalks, streets or other property;

DRAFT

6) Adequate provisions shall be made for the proper and convenient disposal of refuse. The applicant shall provide evidence that adequate measures will be in place to prevent pollutants from being washed into the groundwater or waterways. Any chemicals or polluted runoff that may be hazardous to aquatic life shall be stored within an area that will completely contain any leaks, spills or polluted runoff;

7) A stacking area for vehicles that is accessible to the entrance of the washing equipment is required. Such stacking areas shall accommodate a minimum of one hundred (100) linear feet of stacking spaces as measured from the bay entrance. Such information shall be provided to the Municipality as part of the application for the conditional use;

8) The building exit for automobiles that have completed the washing and machine drying process shall be set back a minimum of 50 feet from the nearest point of any street property line;

9) All mechanical equipment shall be screened from the view of adjoining properties;

10) All waste collection/storage areas shall be located at least fifty (50) feet from the nearest building and shall be enclosed by a solid masonry screen wall;

11) Outdoor speakers shall be permitted for emergency announcements only;

12) The governing body shall determine the proposed use will not create detrimental impacts on the surrounding properties, considering the probable traffic generation, parking, pedestrian safety, noise and hours of operation; and

13) Any car wash, which also dispenses gasoline, shall meet all applicable requirements of §504.CC. governing a fuel service and/or charging station.

JJJJ. Veterinary Hospital

1) A traffic impact study shall be required;

2) A veterinary hospital shall comply with applicable governmental agencies, regulations and laws, prior to the issuance of any permit;

3) The minimum lot area required for a veterinary hospital shall be twenty thousand (20,000) square feet;

4) All kennels and other facilities for the housing, boarding and keeping of animals upon the premises shall be located within an entirely enclosed building or structure;

5) All mechanical equipment shall be screened from the view of adjoining properties;

6) All waste collection/storage areas shall be located at least fifty (50) feet from the nearest building and shall be enclosed by a solid masonry screen wall;

7) Noise and odors shall comply with the limits set forth in this ordinance;

8) Outdoor kennels or runs shall not be permitted; and

DRAFT

9) Overnight boarding of animals, other than for medical supervision, shall be permitted, if the animals are boarded within a completely enclosed building.

KKKK. Vocational School

1) A traffic impact study shall be required;

2) The outdoor area devoted to the storage of materials shall be completely enclosed by an eight (8)-foot high opaque fence, which shall be set back at least fifty (50) feet from all property lines and one hundred (100) feet from residentially zoned, or existing residential properties;

3) Storage areas shall be a dust-free, all-weather surface such as asphalt, concrete or compacted gravel;

4) The Vocational S*chool* shall have access directly to a public road;

5) All mechanical equipment shall be screened from the view of adjoining properties;

6) All waste collection/storage areas shall be located at least fifty (50) feet from the nearest building and shall be enclosed by a solid masonry screen wall;

7) Outdoor speakers shall be permitted for emergency announcements only;

8) Buildings on the lot shall be set back at least forty (40) feet from all property lines and shall be no higher than thirty-five (35) feet;

9) Recreational areas shall be located no closer than thirty (30) feet to an abutting street or thirty (30) feet from other property lines; and

10) Ingress, egress, and internal traffic circulation shall be designed to minimize congestion during peak usage of the facility.

LLLL. Warehousing and Self-Storage Facilities (Public / Private).

1) A traffic impact study shall be required;

2) The facility's operating hours will be from 7:00am to 10:00pm;

3) No curb cuts or driveways that provide access to or from a residential street shall be used or established;

4) Outdoor storage facilities shall be completely fenced in, with a locking gate system, using a chain-link type fence. Fence shall be a minimum of six (6) feet in height and a maximum of ten (10) feet in height;

5) Fences along property lines of residential uses shall have screens installed for privacy. Solid fences may be used with the approval of the Municipal Council;

6) No curb cuts or driveways shall be located within 150 feet of any residential district boundary line;

DRAFT

7) No trucks, tractors or trailers shall be maneuvered, parked, fueled, stored, loaded or unloaded within 100 feet of any residential district;

8) All mechanical equipment shall be screened from the view of adjoining properties;

9) All waste collection/storage areas shall be located at least fifty (50) feet from the nearest building and shall be enclosed by a solid masonry screen wall;

10) Outdoor speakers shall be permitted for emergency announcements only;

11) Adequate lighting shall be provided for security, but it shall be directed away or shielded from any adjacent residential uses;

12) An on-site manager will be available at all times during the facility's established operating hours;

13) No outside storage of customer goods shall be permitted;

14) Outdoor storage shall be limited to recreational vehicles, boats and trailers. No "junk vehicles" shall be stored within view of a public street or a dwelling;

15) No hazardous materials or flammable items will be permitted to be stored in the facility;

16) Interior traffic aisles shall be kept clear of obstructions to emergency vehicles;

17) Customers shall not be permitted to operate a business or equipment within a Self- Storage unit; and

18) The size of a Self-Storage unit shall not exceed one thousand (1,000) square feet.

MMMM. Wind Energy Facility (Windmill), Principal Use -- Also refer to Section: 1211 (11) Windmill

1) The following project information shall be submitted to the Municipality for every proposed wind energy facility:

   a) Project narrative including the following: an overview of the project, project location, the approximate generating capacity, the number, representative types and heights of wind facilities to be constructed, including their generating capacity, dimensions, and respective manufacturers, and description of any ancillary facilities to the wind energy facility;

   b) An affidavit or similar evidence of agreement between the property owner and the wind energy facility owner or operator, demonstrating permission to apply for necessary permits for construction and operation of a wind energy facility;

   c) Identification of the properties on which the proposed wind energy facility will be located and the properties adjacent to the proposed location;

   d) A site plan showing the planned location of each proposed wind energy, property lines, setback lines, access roads and the location of any

DRAFT

ancillary structures, including equipment, cabling, buildings, structures, transmission lines, and substations;

e) A view shed impact analysis, illustrating views of the proposed wind energy facility, from multiple angles;

f) A design certification by a certified engineer, consisting of the proposed foundation design and analysis of soil conditions;

g) Where the installation of the wind energy facility constitutes a land development, the applicant shall apply for, and receive land development approval pursuant to the Subdivision and Land Development Ordinance;

h) The applicant shall provide a copy of the application materials to the Municipality emergency service providers, including the responsible police department, Municipal-designated emergency medical services provider and the volunteer fire departments. The applicant shall provide the Municipality with an emergency response plan for the wind farm that has been developed with and approved by the above emergency service providers. The applicant shall coordinate implementation of this emergency response plan for the wind farm with the above emergency service providers;

i) The applicant shall demonstrate that they have received all necessary Federal, State, County and licenses, permits and approvals to operate a wind farm and related windmills;

j) The design of the wind energy facility shall conform to applicable industry standards, including those of the American National Standards Institute. They shall submit certificates of design compliance obtained by the equipment manufacturers from Underwriters Laboratories, Det Norske Veritas, Germanishcer Lloyd Wind Energies, and/or other similar certifying organizations;

k) To the extent applicable, all facilities shall comply with the state Uniform Construction Code and the regulations adopted by the Pennsylvania Department of Labor and Industry;

l) All wind energy facilities shall be equipped with a redundant braking system. This includes both aerodynamic over speed controls (including variable pitch, tip and other similar systems) and mechanical brakes. Mechanical brakes shall be operated in a fail-safe mode. Stall regulation shall not be considered a sufficient braking system for over speed protection;

m) All electrical components of the wind energy facility shall conform to relevant and applicable local, state and national codes, and relevant and applicable international standards. Any electrical equipment associated with a wind farm shall be located under the sweep area of a windmill blade;

n) The exterior surface of any visible components of a wind energy facility shall be non-reflective, and of a non-obtrusive and neutral color (such

DRAFT

as white or off-white). Windmills and related facilities of a wind farm located within one (1) mile of each other must be of uniform design, including tower type, color, number of blades, and direction of blade rotation;

o) Wind energy facilities shall be of monopole construction to the greatest extent possible. If monopole construction is not possible, then a windmill must be of freestanding construction to the greatest extent possible. If monopole or freestanding construction is not possible, then a windmill may be guyed;

p) No signs or lights shall be mounted on a wind energy facility or related windmill, except:

   i. Those required by the Federal Aviation Administration or other governmental agency which has jurisdiction; and

   ii. A clearly visible warning sign concerning voltage must be placed at the base of all pad-mounted transformers and substations. Visible, reflective, colored objects, such as flags, reflectors, or tape shall be placed on the anchor points of any guy wires and along the guy wires up to a height of fifteen (15) feet from ground level.

q) All on-site electric and other utility lines associated with a wind energy facility shall be buried underground or out of sight;

r) Wind energy facilities shall not be climbable up to fifteen (15) feet above ground level. All wind energy facilities shall be fitted with any anti-climbing devices recommended by the windmill manufacturer for the type of installation proposed. All access doors to windmills and electrical equipment shall be locked or fenced, as appropriate, to prevent entry by non-authorized persons;

s) The minimum lot area for a wind energy facility shall be five (5) acres;

t) Facilities shall not display advertising, except for reasonable identification of the facility manufacturer;

u) The blade of a windmill shall be located at least thirty (30) feet above the adjacent ground level;

v) No moving parts of the wind energy facility shall extend over parking areas, driveways, roads, or sidewalks, except access ways necessary to service the wind energy facility;

w) The wind farm, windmills and related facilities shall comply with the following setback requirements:

   i. Windmills shall be set back from occupied buildings a distance not less than the normal setback requirements for the relevant zoning district or 1.2 times the windmill structure height, whichever is greater. The setback distance shall be measured

DRAFT

from the center of the windmill to the nearest point on the foundation of the occupied building;

ii. Windmills shall be set back from the property lines of a nonparticipating landowner a distance not less than five hundred (500) feet or 1.2 times the windmill structure height, whichever is greater. The setback distance shall be measured from the center of the windmill;

iii. Windmills shall be set back from public roads a distance not less than the normal setback requirements for the relevant zoning district or 1.2 times the windmill structure height, whichever is greater. The setback distance shall be measured from the center of the windmill to the nearest right-of-way line of the public road;

iv. Windmills shall be set back from above-ground utility lines a distance not less than 1.2 times the windmill structure height as measured from the center of the windmill to the nearest utility right-of-way line;

v. The occupied building and nonparticipating landowner property line setback requirements of paragraphs (a) and (b) above shall not apply if the owner of the subject occupied building and/or the nonparticipating landowner executes an easement agreement with the owner of the property on which the windmill is located which grants a lesser setback and/or non-disturbance easement. This easement agreement shall comply with the following requirements:

x) The easement agreement shall be recorded with the Allegheny County Department of Real Estate, or its successor agency;

y) The easement agreement shall specifically reference the setback required by this Article, describe how the windmill is not in compliance with this required setback, and state that consent and an easement is granted for the windmill to not be setback as required by this Article;

z) The easement agreement shall describe the properties benefited and burdened;

aa) The easement agreement shall advise all subsequent purchasers of the burdened property that easement shall run with the land and may forever burden the subject property.

bb) Any individual wind energy facility shall be separated from any other wind energy facility by a minimum of 1.1 times the height of the facility, measured from the tips of the blades when the blades are parallel with the ground level;

cc) All equipment buildings and electrical/mechanical equipment related to the wind farm shall comply with the yard; setback, height and other requirements and restrictions applicable to a principal structure located in the same zoning district and shall be enclosed with a ten (10)-foot fence. The exterior of this fenced area shall be landscaped so as to

DRAFT

screen the equipment building and electrical/mechanical equipment from abutting properties;

dd) Noise from a wind energy facility shall not exceed fifty (50) decibels at the lot line adjacent to any lot in a non-residential zoning district and fifteen (15) decibels at the lot line adjacent to any lot in a residential zoning district, unless the adjacent property owner shall have executed a non-disturbance easement, covenant, or consent which has been recorded in the Department of Real Estate of Allegheny County or its successor agency. The decibel measurement shall be taken at the exterior of any occupied structure on any property other than that occupied by the wind energy facility. Methods for measuring and reporting acoustic emissions from the wind energy facility shall be equal to or exceed the minimum standards for precision described in AWEA Standard 2.1, latest version, titled Procedures for the Measurement and Reporting of Acoustic Emissions from Wind Turbine Generation Systems Volume I: First Tier, and revised;

ee) The owner and operator of the wind farm shall take such reasonable steps as are necessary to prevent, mitigate and eliminate windmill shadow flicker on occupied buildings and the property of nonparticipating landowners;

ff) The owner and operator of the wind farm shall take such reasonable steps as are necessary to prevent, mitigate and eliminate any disruption or loss of radio, telephone, television or similar signals;

gg) If a wind farm or individual windmill remains unused for a period of twelve (12) consecutive months, then the owner and operator shall, at its expense, dismantle and remove the wind farm or subject windmill within six (6) months of the expiration of such twelve (12)-month period. The owner and operator shall also comply with the following requirements:

i. The owner and operator shall remove the windmill(s) and related buildings, cabling, electrical/mechanical equipment, foundations to a depth of thirty-six (36) inches, roads and any other associated facilities; and

ii. Disturbed earth shall be graded and re-seeded.

hh) Decommissioning funds shall be posted and maintained with the Municipality, in an amount equal to one hundred and twenty-five percent (125%) of the estimated decommissioning costs, for as long as the wind energy facility exists, regardless of change of ownership of the wind energy facility or property on which it sits. Decommissioning shall include removal of wind turbines, buildings, cabling, electrical components, roads, foundations, and any other associated facilities:

i. An independent and certified professional engineer shall estimate the total cost of decommissioning without regard to salvage value of the equipment;

DRAFT

ii. Decommissioning funds shall be posted and maintained with a bonding company, provided that the bonding company is authorized to conduct such businesses within the Commonwealth of Pennsylvania and approved by the Municipality and shall be in a form acceptable to the Municipality;

iii. If the wind energy facility remains unused for a period of twelve (12) consecutive months, the owner, operator, or property owner shall, at its expense, complete decommissioning of the system within six (6) months. The wind energy facility will be presumed to be at the end of its useful life if no electricity is generated for a continuous period of twenty-four (24) months; and

iv. If the wind energy facility owner, operator, or property owner shall fail to appropriately complete decommissioning, the Municipality may take such action as necessary to complete the decommissioning. The entry into and submission of evidence of a Participating Landowner agreement to the Municipality shall constitute agreement and consent of the parties to the agreement, their respective heirs, successors, and assigns that the Municipality may take such action as necessary to implement the decommissioning.

ii) Any physical modification to an existing and permitted wind farm that materially alters the size, type and number of windmills or other equipment, except a like-kind replacement, shall require the developer to apply for and obtain conditional use approval;

jj) Access to the wind farm shall be provided in accordance with the standards of the Subdivision and Land Development Ordinance. The standards, requirements, and restrictions of the Subdivision and Land Development Ordinance shall apply regardless of whether or not the wind farm, windmill(s), and/or related facilities are considered to constitute a subdivision and/or land development; and

kk) The applicant shall demonstrate the number of off-street parking requirements needed for the wind farm by providing the Municipality with a traffic/parking study prepared by a qualified traffic/parking engineer demonstrating the need for off-street parking based upon specific accepted engineering principles and manuals.

~ END OF SECTION ~

DRAFT

THIS PAGE INTENTIONALLY LEFT BLANK

DRAFT

§601 Purpose
§602 Development Plan Required
§603 Compliance
§604 Pre-Application Conference
§605 Tentative Plan Application Procedure
§606 Tentative Plan Application Content
§607 Public Hearing
§608 Tentative Plan Approval Criteria
§609 Council Action on Tentative Plan Application
§610 Status of Plan After Tentative Approval
§611 Final Plan Application Procedure
§612 Final Plan Application Content
§613 Council Action on Final Plan Application
§614 Recording
§615 Abandonment and Revocation
§616 Guarantee of Improvements (Performance Bond)
§617 Design Standards
§618 Deviation by Waiver Prior to Final Plan Approval
§619 Enforcement and Modification of a Final Approved Plan

§601 Purpose

The purpose of the planned residential development regulations includes:

A. Encourage innovations in residential development to meet the growing demand for housing;

B. Encourage greater variety in type, design and layout of residential dwellings;

C. Conserve open space and encourage a more efficient use of land and public services;

D. Insure increased flexibility of land development regulations; and

E. Provide a procedure to relate the type, design and layout of residential development to characteristics of a particular lot. When a Developer proposes flexible and innovative design techniques, the Planned Development District process offers an opportunity for creative solutions and development. This Part provides uniform development standards and application processes for the Planned Development District applications. The Traditional Neighborhood Development concepts are desirable for all Planned Development Districts.

§602 Development Plan Required

No planned residential development shall be approved or recorded, no lot shall be sold nor any structure built, altered, moved or enlarged in any planned residential development unless and until a development plan has been approved and recorded and until the improvements required and connected therewith have either been constructed or guaranteed, as herein provided.

§603 Compliance

DRAFT

A. A planned residential development shall be permitted as a Conditional Use within the specific zoning district specified in this Ordinance, subject to compliance of this Article, this Ordinance and other applicable Municipal ordinances;

B. The provisions in this Article for approval of a planned residential development plan shall be a modification to and in lieu of procedures and approvals otherwise required in this Ordinance and in the Subdivision and Land Development Ordinance. Failure to comply with this Article with respect to a recorded development plan shall be deemed to constitute a violation of this Ordinance.

§604 Pre-Application Conference

Prior to filing an application for tentative plan approval, a prospective applicant may schedule a pre-application conference with Municipal Staff to discuss the applicable regulations governing the planned residential development. The pre-application conference is voluntary and no formal application or fee is required. This opportunity is afforded to the applicant and/or landowner to obtain information and guidance before entering into binding commitments or incurring substantial expenses for plan preparation.

§605 Tentative Plan Application Procedure

A. An application for tentative plan approval of a planned residential development shall be filed on forms as prescribed by the Municipality, at least thirty (30) days prior to the date of the regular meeting of the Planning Commission. The tentative plan application shall not be complete and properly filed unless and until all items required by §606, including the application fee and deposit, have been received by the filing date. The Zoning Officer shall review the application to determine whether the applicant has submitted all required materials.

B. The Zoning Officer shall submit one copy of the application and any materials submitted therewith to the appropriate governmental agencies. The Municipal Council shall not approve the tentative plan application until reports from each of these agencies have been received, or the expiration of thirty (30) days from the date the copies were forwarded to said agencies.

§606 Tentative Plan Application Content

A. The application for tentative plan approval shall be submitted to the Zoning Officer, in the form prescribed from time to time by the Municipality with no fewer than:

1) Fifteen (15) full-scale and five (5) half-scale copies of all required plans, maps and drawings; and

2) Twenty (20) copies of all other application materials.

B. The application for tentative plan approval shall contain the following:

1) All information and data required for a preliminary plan as specified in the Subdivision and Land Development Ordinance;
2) The location, size, existing topography, proposed topography and nature of the planned residential development to be developed;

3) The density of land use to be allocated to parts of the site to be developed;

DRAFT

4) Location and size of the common open space, the location, size and type of improvements proposed within the common open space and the proposed ownership and maintenance arrangements for the common open space;

5) The use and the appropriate height, bulk and location of buildings and other structures;

6) The feasibility of proposals for water supply and the disposition of sanitary waste and water;

7) The substance of covenants, grants of easements, rights-of-way or other restrictions proposed to be imposed upon the use of the land, common open space, buildings and structures including proposed easements or grants for public utilities;

8) Provisions for vehicular parking and location and width of proposed streets;

9) Location and design of all screening and landscaping, indicating the type, location and height of all plantings;

10) Renderings of proposed dwellings;

11) The extent to which the proposed development plan deviates from otherwise applicable Municipal zoning and subdivision and land development regulations;

12) In the case of development plans which call for development over a period of years, a phasing plan and a schedule showing the proposed times in which applications for final approval of all phases of the development will be filed. This schedule shall be updated annually, by the anniversary of its previous approval, until the development is completed and accepted;

13) A written statement by the applicant and/or landowner which sets forth:

    a) The reasons why the proposed development plan is in the public interest and is consistent with the purposes and requirements of the Zoning Ordinance, the Subdivision and Land Development Ordinance and the Comprehensive Plan;

    b) The disposition of common open space lands and the provisions for their maintenance, ownership and control; and

    c) The purpose, location and amount of common open space within the development plan, the reliability of the proposal for maintenance and conservation of such common open space, and the adequacy or inadequacy of the amount and purpose of such common open space land as related to the proposed density and type of development.

§607 Public Hearing

Council shall hold a public hearing, pursuant to public notice, on the tentative plan within the time periods and procedures required by the MPC. The hearing shall commence within sixty (60) days of the filing of an administratively complete application. The hearing may be continued from time to time, provided, however, that the public hearing or hearings shall be concluded within sixty (60) days

DRAFT

after the date of the first public hearing. The public hearing shall be conducted in accordance with section 908 of the MPC.

§608 Tentative Plan Approval Criteria

Council shall give tentative approval to the proposed land development plan if the applicant establishes that each of the following criteria is met:

A. The tentative plan complies with all applicable standards and conditions of the Zoning Ordinance, preserves the community development objectives of the Zoning Ordinance and is found by Council to be consistent with the Comprehensive Plan;

B. Where the development plan departs from the Zoning Ordinance and Subdivision and Land Development Ordinance otherwise applicable to the subject property, such departures are in the public interest and promote the public's health, safety and welfare;

C. Proposals for the maintenance and conservation of any proposed common open space are reliable and the amount and extent of improvements of such open space are adequate with respect to the purpose, use and type of residential development proposed;

D. The physical design of the development plan adequately provides for public services, traffic facilities and parking, light, air, recreation and visual enjoyment;

E. The total environment of the development plan is harmonious and consistent with the neighborhood in which it is located;

F. The development plan shall afford a greater degree of protection of natural watercourses, topsoil, trees and other natural features and the prevention of erosion, landslides, siltation and flooding than if the subject property were developed in accordance with provisions of the Zoning Ordinance and the Subdivision and Land Development Ordinance;

G. In the case of a development plan which proposes development over a period of years, the terms and conditions shall be sufficient to protect the interests of the public and of the residents of the planned residential development in the integrity of the development plan; and

H. The grant or denial of the tentative approval application shall include findings of fact related to the proposed development plan as submitted for approval and the reasons for the decision shall be set forth with particularity in what respect the proposed development plan would or would not be in the public interest, including, but not limited, to each of the above criteria.

§609 Council Action on Tentative Plan Application

A. Council shall render its decision on the tentative plan application, in writing, within sixty (60) days following the conclusion of the public hearing provided in this Article or within 180 days after the date of the filing of an administratively complete application, whichever occurs first. Failure to act within said period shall be deemed to be a grant of tentative approval of the development plan as submitted;

B. Council shall, by official written communication to the applicant and/or landowner, either:

1) Grant tentative approval of the development plan as submitted;

DRAFT

2) Grant tentative approval subject to specified conditions not included in the development plan as submitted; or

3) Deny tentative approval to the development plan.

C. In the event that tentative approval is granted subject to conditions, the landowner may, within thirty (30) days after receiving a copy of the official written communications by Council, notify Council of the refusal to accept all conditions, in which case, Council shall be deemed to have denied tentative approval of the development plan. In the event the applicant and/or landowner does not, within the same period, notify Council of refusal to accept all conditions, tentative approval of the development plan, with all conditions, shall stand as granted;

D. Council shall not act on a tentative plan application unless the Municipality has received written review of the application by the Allegheny County Department of Economic Development or its successor, or at least until thirty (30) days have passed since the date of referral to the Allegheny County Department of Economic Development or its successor;

E. The written decision granting or denying tentative plan approval shall set forth with findings of fact and conclusions of law related to the following:

1) The manner in which the development plan would or would not be in the public interest;

2) The manner in which the development plan is or is not consistent with the Comprehensive Plan;

3) The extent to which the development plan departs from the requirements of the Zoning Ordinance and the Subdivision and Land Development Ordinance otherwise applicable to the subject property including, but not limited to, density, bulk and use, and the reasons why such departures are not deemed to be in the public interest;

4) The purpose, location and amount of common open space in the proposed development plan, the reliability of the proposal for maintenance and conservation of common open space and the adequacy or inadequacy of the amount and purpose of common open space as related to the proposed density and type of residential development;

5) The physical design of the development plan and the manner in which said design does or does not make adequate provision for public services, provide adequate control over vehicular traffic and further the amenities of light, air, recreation and visual enjoyment;

6) The relationship, beneficial or adverse, of the proposed development to the neighborhood in which it is proposed to be established; and

7) In the case of a tentative plan, which proposes development over a period of years, the sufficiency of the terms and conditions intended to protect the interests of the public and of the residents of the planned residential development in the integrity of the development.

DRAFT

F. In the event a development plan is granted tentative approval, with or without conditions, Council may set forth in the written decision the time within which an application for final approval of the development plan shall be filed or, in the case of the development plan which provides for development over a period of years, the period of time within which applications for final approval of each phase thereof shall be filed. Except upon the consent of the landowner, the time so established between the grant of tentative approval and an application for final approval shall not be less than three (3) months and, in the case of developments over a period of years, the time between the applications for final approval of each part of a plan shall not be less than twelve (12) months;

G. If Council approves the tentative plan application subject to certain conditions, then the applicant and/or landowner shall not file a final plan application until all such conditions are addressed and complied with in a manner acceptable to the Municipality;

H. Approval of a tentative plan application shall only constitute authorization to proceed with preparation and filing of a final plan application once all conditions of approval have been addressed and complied with in a manner acceptable to the Municipality.

§610 Status of Plan after Tentative Approval

A. The Municipal Manager shall certify the official written communication and a certified copy shall be mailed to the applicant and/or landowner. Where tentative approval has been granted, it shall be deemed an amendment to the Municipal Zoning Map, effective upon final approval, and shall be noted on the Zoning Map;

B. Approval of a tentative plan shall not qualify a plat of a planned residential development for recording nor authorize development or the issuance of any building permits;

C. In the event that a development plan is given tentative approval and thereafter, prior to final approval, the applicant and/or landowner elect to abandon the development plan by written notification to the Municipality, or in the event the applicant and/or landowner fail to file application(s) for final approval within the required time period(s), the tentative plan approval shall be deemed to be revoked and all that portion of the area included in the development plan for which final approval has not been granted shall be subject to the otherwise applicable Municipal ordinances.

§611 Final Plan Application Procedure

A. Prerequisite to filing Final Plan. An application for final plan approval can be submitted provided that:

1) Council has granted tentative approval to the development plan; and

2) All conditions imposed by Council on the tentative plan approval have been complied within a manner acceptable to the Municipality.

B. An application for final plan approval for a planned residential development shall be filed with the Zoning Officer, on forms as prescribed by the Municipality, at least thirty (30) days prior to the date of the regular meeting of the Planning Commission. The final plan application shall not be considered complete and properly filed unless or until all items required in §612 of this Article, including the application fee and deposit, have been received by the filing date;

DRAFT

C. The Zoning Officer shall review the application to determine whether all materials required by §612 and any other relevant Municipal ordinance have been submitted by the applicant;

D. The Zoning Officer shall submit one (1) copy of the application and any materials submitted therewith to the following entities for review: The Municipal Director of Building and Engineering; the Municipal Engineer; the Allegheny County Department of Economic Development or its successor; and any other appropriate Municipal personnel, agencies or professional consultants;

E. The final plan may be submitted in phases or sections as shown on the approved tentative plan and phasing schedule pursuant to §609 of this Article.

§612 Final Plan Application Content

A. The application for final plan approval shall be submitted to the Zoning Officer, in the form prescribed from time to time by the Municipality, with no fewer than:

1) Ten (10) full-scale and ten (10) half-scale copies of all required plans, maps and drawings; and

2) Twenty (20) copies of all other application materials.

3) A digital copy of all sumbitted plans and supporting materials.

B. The application for final plan approval shall contain the following:

1) All information and data required for a final plan as specified in the Subdivision and Land Development Ordinance;

2) Accurately dimensioned locations of all proposed buildings, structures, parking areas and common open spaces;

3) The number of families to be housed in each structure;

4) Rendering of proposed dwellings;

5) Landscaping plan, including the location of sidewalks;

6) The substance of covenants, grants of easements, rights-of-way or other restrictions proposed to be imposed upon the use of land, common open space, buildings and structures including proposed easements for public utilities; and

7) Provisions for the maintenance, ownership and operation of common open spaces and common recreation facilities.

8) All conditions of the tentative PRD approval.

§613 Council Action on Final Plan Application

A. In the event that an administratively complete application for final plan approval has been filed in accordance with this Article and the relevant tentative plan approval decision letter, Council shall render its decision on the final plan application, in writing, within forty-five (45) days following the regular meeting of the Planning Commission next following

DRAFT

the date of an administratively complete application; provided that should the next said Planning Commission meeting occur more than thirty (30) days following the filing of an administratively complete application, said forty-five (45)-day period shall be measured from the 30th day following the date of filing of the administratively complete application;

B. If the final development plan as submitted contains variations from the development plan granted tentative approval, Council may refuse to grant final approval. Council shall forward written notice of such refusal to the applicant and/or landowner within forty five (45) days following the regular meeting of the Planning Commission next following the date of filing of an administratively complete application; provided that should the next said Planning Commission meeting occur more than thirty (30) days following the filing of an administratively complete application, the forty five (45)-day period shall be measured from the 30th day following the filing of the administratively complete application. This written notice of refusal shall set forth the reasons why one or more of the variations are not in the public interest. In the event of such refusal, the applicant and/or landowner may either:

1) Resubmit the application for final plan without the objected variations; or

2) File a written request with Council to hold a public hearing on the application for final approval. This public hearing shall be held within thirty (30) days of the Municipality's receipt of the request and the hearing shall be conducted in accordance with the procedures for hearing on tentative plan applications. Within thirty (30) days after the conclusion of the public hearing, Council shall issue a written decision either granting or denying final plan approval. The decision shall be in the form required for tentative plan approval.

§614 Recording

The approved final plan shall be recorded by the applicant and/or landowner in accordance with the requirements in the Subdivision and Land Development Ordinance.

§615 Abandonment and Revocation

Final approval of a development plan shall be revoked if the applicant and/or landowner provides Council with written notice of the intention to abandon the plan, or if the applicant and/or landowner fails to commence and carry out the planned residential development in accordance with the time provisions referenced in Section 508 of the MPC, 53 P.S. §10508, and/or the final plan approval decision. Upon the occurrence of such revocation, no further development shall occur on the property that is the subject of the revoked development plan unless a subsequent development plan is approved and such development complies with the Zoning Ordinance and Subdivision and Land Development Ordinance.

§616 Improvements

No development plan for a planned residential development shall be finally approved unless all improvements required by this Article have been installed in strict conformance with this Article and the Subdivision and Land Development Ordinance, or a guaranty that the improvements will subsequently be installed by the applicant and/or landowner in the form of financial security which complies with the requirements of the Subdivision and Land Development Ordinance and is from a source and of a form acceptable to the Municipal Solicitor. Such financial security shall provide and secure to the public the completion of all improvements from the development plan and/or relevant phase within a period of two years from the date of final approval of the development plan and/or

DRAFT

relevant phase. The applicant and/or landowner shall otherwise comply with the requirements of the Subdivision and Land Development Ordinance.

§617 Design Standards

A Planned Residential Development (PRD) shall comply with the following requirements:

A. Permitted Principal Uses

1) The principal uses permitted on a lot or parcel within a planned residential development shall be strictly limited to the following:

a) R-1 Single-Family Residential District

i. Single-Family Home

ii. Two-Family Home

iii. Townhouse

iv. Recreational Facility

v. No-Impact Home-Based Business

vi. Private Garage and Parking Areas

b) R-2 Single-Multi Family Residential District

i. Single-Family Home

ii. Two-Family Home

iii. Townhouse

iv. Garden Apartment

v. Recreational Facility

vi. No-Impact Home-Based Business

vii. Private Garage and Parking Areas

c) R-3 Multi-Family Residential District

i. Single-Family Home

ii. Two-Family Home

iii. Townhouse

iv. Garden Apartment

v. Recreational Facility

DRAFT

vi. No-Impact Home-Based Business

vii. Private Garage and Parking Areas

viii. Small Retail, Personal Services, Restaurant (takeout only), Fitness Center, Small Offices, Day Care Center etc.

d) R-4 Multi-Family Residential District

i. Single-Family Home

ii. Two-Family Home

iii. Townhouse

iv. Garden Apartment

v. Apartment

vi. Recreational Facility

vii. No-Impact Home-Based Business

viii. Private Garage and Parking Areas

ix. Small Retail, Personal Services, Restaurant (takeout only), Fitness Center, Small Offices, Day Care Center etc. ???

B. Ownership

1) The entire site for the proposed development plan shall be owned and/or controlled by the landowner;

C. Minimum Site

1) The site of the proposed development plan shall not be less than five (5) acres;

D. Minimum Site Frontage

1) The site of the proposed development shall have a minimum right-of-way frontage of two hundred (200) feet;

E. Minimum Building Separation

1) The minimum distance between the nearest point of any exterior building wall shall not be less than twenty (20) feet. The requirements determining the spacing of buildings shall be flexible so as to encourage imaginative site design. The spaces between buildings shall guarantee adequate light, air and emergency access;

F. Maximum Height

1) The maximum height shall be thirty-five (35) feet, except when the minimum building setback is increased in accordance to §617.G;

DRAFT

G. Minimum Building setback

1) No structure shall be located closer than forty (40) feet to any boundary on the site. The setback shall be increased by an additional one (1) foot for every two (2) feet of height that exceeds thirty-five (35) feet in height;

H. Density, Yard and Bulk Requirements

1) The overall density shall not exceed the average lot area per family calculated exclusive of public or private streets and extensive slope areas as specified in Table 302 of ninety percent (90%) of the minimum lot area per family;

2) The minimum lot area for each dwelling unit as specified in Table 601:

Table 601-PRD Density of Development Limits for PRD's

	R-1	**R-2**	**R-3**	**R-4**
Single-Family Home	7,500 SF	7,500 SF	7,500 SF	10,000 SF
Two-Family Home	N/A	4,375 SF	4,375 SF	4,375 SF
Townhouse	N/A	3,200 SF	3,200 SF	3,200 SF
Garden Apartment	N/A	2,400 SF	2,400 SF	2,400 SF
Apartment	N/A	N/A	N/A	1,200 SF

3) The maximum floor area ratio for residential uses as specified in Table 602:

Table 602-PRD Maximum Floor Area Ratio for PRD's

	R-1	**R-2**	**R-3**	**R-4**
Under Four Stories	.30	.33	.40	.50
Four Stories	N/A	N/A	.50	.60
Five Stories	N/A	N/A	.60	.70
Six Stories	N/A	N/A	.70	.80
Seven Stories	N/A	N/A	N/A	.90
Eight Stories	N/A	N/A	N/A	1.00
Nine Stories	N/A	N/A	N/A	1.10
Ten or More Stories	N/A	N/A	N/A	1.20

I. Building Groupings

1) Structures used for dwelling units shall be oriented as to ensure adequate light and air exposures for walls containing main window exposures or main entrances. Each structure shall be arranged as to avoid undue exposure to concentrated loading or parking facilities;

J. Common Open Space

1) Ownership Requirements - Not less than fifteen percent (15%) of the total site area of a development plan shall be set aside for common open space. No more than fifty percent (50%) of common open space shall be developed, considering its location and probable usage. The common open space shall be dedicated or

DRAFT

otherwise preserved and maintained so as to always remain open and available for use by the occupants of the development. Common open space, including all improvements and facilities shall be:

a) Dedicated for public use to a public body which agrees to operate and maintain the dedicated land and facilities, but no public body is obliged by the Zoning Ordinance to accept such dedication;

b) Operated and maintained by an organization represented by the property owners of the development. Such organization may not dissolve nor dispose of the common open space unless maintenance of the common open space is guaranteed to the Municipality's satisfaction; and

c) Deeded to an organization representing the property owners of the development, which organization shall covenant to operate and maintain land and facilities. Such organization may not be dissolved nor dispose of the Common Open Space unless the maintenance of the Common Open Space is otherwise guaranteed to the Municipality's satisfaction.

d) Common Open Space shall be located throughout the entire PRD (not concentrated only in one centralized location in the PRD), so that the open space is accessible to all residents of the PRD.

2) Connectivity

a) In addition to connectivity through streets, a pedestrian-oriented network that provides pedestrian connections (trials and sidewalks) to all adjacent properties that have pedestrian connection potential, parks, and/or other amenities within or near the PRD and connect trials and sidewalks to existing adjacent trails and sidewalks to create complete pedestrian circulations shall be required.

b) Trails constructed as a recreation amenity within a PRD may not substitute for required sidewalks or ADA accessibility and connectivity within the PRD

3) Maintenance Requirements

a) In the event that the organization established to own and maintain common open space or any successor organization, shall at any time after establishment of the planned residential development fail to maintain the common open space in reasonable order and accordance with the development plan, the Municipality may serve written notice upon such organization or upon the property owners of the planned residential development setting forth the manner in which the organization has failed to maintain the common open space in reasonable condition, and said notice shall include a demand that such deficiencies of maintenance be corrected within thirty (30) days thereof and shall state the day and place of a hearing which shall be held within fourteen (14) days of the notice. At such hearing, the Municipality may modify the terms of the original notice as to the deficiencies and may give an extension of time within which they shall be corrected;

b) If the deficiencies set forth in the original notice or in the modification thereof shall not be corrected within thirty (30) days of any extension

DRAFT

thereof, the Municipality, in order to preserve the taxable values of the properties within the planned residential development and to prevent the common open space from becoming a public nuisance, may enter upon the common open space and maintain the same for a period of one (1) year. The maintenance by the Municipality shall not constitute a taking nor vest in the public any rights to use the same;

c) Before the expiration of the year, the Council shall hold a public hearing upon notice where such organization or property owners of the planned residential development shall show cause why maintenance by the Municipality shall not, at the Municipality's option, continue for a succeeding year. If the Council shall determine that such organization is not ready and able to maintain the common open space in a reasonable condition, then the Municipality, may, at its discretion, continue to maintain said common open space during the next succeeding year and, subject to a similar hearing and determination, in each year thereafter;

d) The decision of the Council shall be subject to appeal in court in the same manner and within the same time limitation as is provided for zoning appeals in the Zoning Ordinance; and

e) The cost of such maintenance by the Municipality shall be assessed ratably against the properties within the planned residential development that have a right of enjoyment of the common open space and shall become a lien on said properties. The Municipality at the time of entering upon said common open space for the purpose of maintenance shall file a lien with Allegheny County upon the properties affected.

K. Parking

1) Off-street parking spaces shall be provided in accordance with Article IX, Off-Street Parking and Loading;

L. Public Transportation

1) Bus loading areas and bus shelters shall be provided within ¼ mile of each residential concentration;

M. Lighting

1) Street lights shall be provided on all public and private streets in the development;

2) The street lights shall be located to ensure adequate illumination in order to protect the safety of the residents of the Planned Development.

N. Streets

1) Streets shall comply with requirements in the Subdivision and Land Development Ordinance; However, an applicant may propose to modify the cartway width of the street, so long as the cartway width is a minimum of 20 feet wide.

2) Where a Planned Development abuts or contains an existing or proposed major traffic street, the Governing Body may require marginal access streets, rear service alleys, reverse frontage lots or such other treatment as will provide

DRAFT

protection for abutting properties, reduction in the number of intersections with major streets, and separation of local and through traffic.

3) Pedestrian safety and accessibility along and near streets in a PRD is a priority. Street and traffic calming elements, including but not limited to, speed humps, choker, bulb-out, median island, and speed tables, shall be used to reduce vehicle speed and create a street environment that is safe and friendly for pedestrians.

O. Storm Water Management

1) Storm water management facilities shall comply with the Municipal Storm water Management Ordinance;

P. Sidewalks

1) Sidewalks shall be installed in accordance with the sidewalk standards set forth in the SALDO (Ord 2525) and Ordinance 2530 Construction Standards; and

Q. Utilities

1) All utilities shall be located underground.

§618 Deviation by Waiver Prior to Final Plan Approval

Prior to final plan approval of the planned residential development, Council may approve deviations from the requirements of this Article. Requests for deviations from the requirements of this Article shall be subject to the application and approval procedures, requirements and standards for waivers under the Subdivision and Land Development Ordinance. Can waivers be granted or will any deviations need variances??? PRDs are unique situations....

§619 Enforcement and Modification of a Final Approved Plan

To further the mutual interest of the residents of the planned residential development and of the public in preservation of the integrity of the development plan, as finally approved, and to insure that modifications, if any, in the development plan, shall not impair the reasonable reliance of residents upon the provisions of the development plan, nor result in changes that would adversely affect the public interest, the enforcement and modification of the provisions of the development plan as finally approved, whether those are recorded by plat, covenant, easement or otherwise shall be subject to the following provisions:

A. The provisions of the development plan relating to the use, bulk and location of buildings and structures, the quantity and location of common open space, except as otherwise provided in this Article, and the intensity of use or the density of residential units shall run in favor of the Municipality. As provided by law, these provisions shall be enforceable by law or in equity by the Municipality without limitation on any powers of regulation otherwise granted by the Municipality;

B. All provisions of the development plan shall run in favor of the residents of the planned residential development but only to the extent expressly provided in the development plan and in accordance with the terms and conditions of the development plan, and to the extent the provisions, whether recorded by plat, covenant, easement or otherwise, may be enforced by law or equity by said residents acting individually, jointly or through an organization designated in the development plan to act on their behalf; provided that

DRAFT

no provisions of the development plan shall be implied to exist in favor of residents of the planned residential development except as to those portions of the development plan which have been finally approved have been recorded;

C. All those provisions of the development plan authorized to be enforced by the Municipality under this section may be modified, removed, or released by the Municipality, except grants or easements relating to the service or equipment of a public utility, subject to the following conditions:

1) No such modification, removal or release of the provisions of the development plan by the Municipality shall affect the rights of the residents of the planned residential development to maintain and enforce those provisions, at law or equity, as provided by this Article; and

2) No modification, removal or release of the provision of the development plan by the Municipality shall be permitted except upon a finding by the Council, following public hearing pursuant to public notice called and held in accordance to this Article and the MPC, that the modification, removal or release of the provision is consistent with the efficient development and preservation of the entire planned residential development, does not adversely affect either the enjoyment of land abutting upon or across the street from the planned residential development or the public interest and is not granted solely to confer a special benefit upon any person.

D. Residents of the planned residential development may, to the extent and in the manner expressly authorized by the provisions of the development plan, modify, remove or release their rights to enforce the provisions of the development plan but no such action shall affect the right of the Municipality to enforce the provisions of the development in accordance with provisions of this Article.

~ END OF SECTION ~

DRAFT

THIS PAGE INTENTIONALLY LEFT BLANK

DRAFT

§701 Purpose
§702 Master Plan Required
§703 Compliance with Other Provisions Required
§704 Application and Review Procedures
§705 Other Agencies to Review
§706 Master Plan Approval
§707 Application for Final Master Plan Lot Approval
§708 Guarantee of Improvements (Performance Bond)
§709 Master Plan Site Requirements and Uses
§710 Specific Standards and Criteria
§711 Common Open Space
§712 Public Improvements
§713 Variances and Modifications
§714 Enforcement

§701 Purpose

The purpose of approving a Master Plan is to encourage owners to assemble large parcels of land to create a coordinated and well-conceived development which otherwise could not be created on small parcels of land. The Master Plan is a mechanism that permits owners and the Municipality to promote and encourage ingenuity in the layout and design of coordinated projects to more effectively improve and enhance sensitive natural resources, open spaces, etc. by allowing flexibility in the site layout from requirements in the underlying zoning.

§702 Master Plan Required

A. No planned nonresidential development may be approved or recorded, no proposed lot shall be sold nor any structure built, altered, moved or enlarged in any planned nonresidential development unless and until a Master Plan has been approved; and

B. The improvements required in connection to any land development therewith shall either be constructed or guaranteed, as herein provided, for each individual land development to begin construction.

C. Where the proposed Development Plan departs from Zoning and Subdivision Regulations otherwise applicable to the subject property, such departures must be shown to be in the public interest and promote the health, safety, and general welfare of the public;

D. Ownership: The entire site for the Planned Group Units shall be owned or controlled by the developer;

E. Minimum Size: The site shall not be less than 10,000 square feet;

F. Frontage: The minimum frontage abutting on a public right- of- way shall not be less than one hundred feet;

G. Access: The site must provide for access from arterial streets indicated in the Comprehensive Plan to assure convenient and safe access which will not cause undue congestion or hazard on local streets;

DRAFT

H. Safety: The site shall be so developed as to avoid danger to health or peril from fire, flood, or other hazard. Land containing or providing hazards to life, health and property, such as quarries, open ditches, land subject to flooding, subsidence, or underground fires shall not be developed for commercial purposes until such hazards have been eliminated or adequate safeguards are provided under the Development Plan;

I. Permitted Uses: Permitted uses and conditional uses as specified in Appendix I: Use Table for the zoning district in which a proposed Planned Group Unit is to be located may be permitted in the Planned Group Unit provided their design, arrangement, landscaping, construction and relationship to adjacent properties and uses meet all requirements set forth in this Ordinance;

J. Yards and Open Spaces: The front, side and rear yards shall not be less than the minimum requirements of the District in which the Planned Group Unit is located. Not less than fifteen (15%) percent of the total site area shall be set aside for open space, and such open space shall be landscaped in a manner suitable for the uses intended for the development;

K. Building Spacing: The requirements determining the spacing of buildings shall be flexible so as to encourage imaginative site design. The spaces between buildings shall guarantee adequate light, air and emergency access. The minimum distance between the nearest points of any exterior building walls shall be not less than thirty feet;

L. Building Groupings: Structures shall be oriented so as to ensure adequate light and air exposures for walls containing main window exposures or main entrances. Each structure shall be so arranged so as to avoid undue exposure to concentrated loading or parking facilities; and

M. Off-Street Parking and Loading: Off-street parking spaces shall be provided at the minimum ratio of one space for every two hundred (200) square feet of gross floor area for retail uses, office uses and amusement uses. All other uses shall provide parking in accordance with Article IX. Five off-street loading berths shall be provided for the first 100,000 square feet of gross floor area, and one additional berth shall be provided for each additional 100,000 square feet.

§703 Compliance with Other Provisions Required

A. The provisions of this Article for approval of a planned nonresidential development plan shall be a conditional use in all nonresidential zoning districts; failure to comply with the provisions of this Article with respect to a recorded development plan shall be deemed to constitute a violation of this Ordinance and the Subdivision and Land Development Ordinance;

B. For the purposes of this Article, the tentative schedule of §704.O.2)c) shall be in lieu of the requirements of §502.

§704 Application and Review Procedures

A. The application for Master Plan approval shall include a location map, site map, proposed development plan and any required engineering reports. The application shall be submitted to the Zoning Officer and shall be accompanied by a fee as may be set forth from time to time by ordinance of the Council;

DRAFT

B. Such plans and other materials shall not be required to meet the standards prescribed for preliminary, tentative or final land development approval or for the issuance of a building permit so long as they provide reasonable notice of the proposed use or development and a sufficient basis for a determination as to its compliance with these regulations. The maps and other documents shall be at the scale and in the same number as comparable documents required for land development under the Subdivision and Land Development Ordinance;

C. The Zoning Officer shall review the application for completeness in accordance with the requirements of this Article. If an application is found to be incomplete, the application shall be remanded; the Zoning Officer shall notify the applicant, in writing, citing the specific deficiencies and the specific requirements of this Ordinance that have not been met;

D. If the Zoning Officer determines that there are deficiencies in the application submission, the Zoning Officer shall return the application to the applicant for resubmission, subject to compliance with the time deadline for filing for the Planning Commission's next regular meeting;

E. The grant or denial or tentative approval shall include findings of fact related to the Proposed Development Plan as submitted for approval, and the reasons for the decision shall be set forth with particularity in what respect the Proposed Development Plan would or would not be in the public interest including, but not limited to, each of the cited criteria;

F. In the event a Development Plan is granted tentative approval, with or without conditions, Council may set forth in the official written communication the time within which an application for final approval of the Development Plan shall be filed or, in the case of a Development Plan which provides for development over a period of years, the periods of time within which applications for final approval of each part thereof shall be filed;

G. The decision of Council shall be in writing and shall be given to the developer personally, or mailed to him at his last known address, not later than five working days following the decision;

H. Failure of Council to render decision and to communicate it to the Applicant in the time and in the manner required, shall be deemed an approval of the application and terms as presented, unless the applicant has agreed in writing to an extension of time or change in the prescribed manner of presentation or of communication of the decision, in which case, failure to meet the extended time or change in manner of presentation and communication shall have like effect;

I. Council may:

1) Grant tentative approval of the subject Development Plan as submitted;

2) Grant tentative approval subject to specified conditions not included in the Development Plan as submitted; or

3) Deny approval of the Development Plan.

J. If the Developer chooses to reject any conditions attached to the grant of tentative approval, he may void such tentative approval by notifying Council within thirty days of the date of this decision;

DRAFT

K. The grant of tentative approval may be revoked by Council if they are notified by the Developer of his intention to abandon the proposed Development Plan. The grant of tentative approval shall be deemed to be revoked if the Developer does not submit an application for final approval within the time limits required by this Article;

L. Application for final approval of each phase shall be filed with the Zoning Officer not later than twelve months following the grant of tentative approval, unless otherwise specified by Council. The application shall comprise one reproducible copy and six prints of the Development Plan for the phase, including a Site Plan and supplementary date, and a Certificate of Completion of Improvements or a Guarantee of Improvements as required by this Ordinance;

M. Upon the approval of a final plat, the developer shall within ninety days of such final approval record such plat in the office of the Department of Real Estate of Allegheny County.

N. The site maps shall include the following:

1) Property Map, showing the boundaries of all land subject to Master Plan approval with the names of all owners. The Property Map shall also show the names of all abutting land owners and any platting of adjoining land to the extent such platting would touch the boundaries of the Master Plan property;

2) Zoning Map, with a minimum scale of one (1) inch equals two hundred (200) feet but including the zoning classification of all properties indicated on said map;

3) Topography Map, with a minimum scale of one (1) inch equals two hundred (200) feet) above, but indicating topography as would appear on the United States Geodetic Survey indicating all man-made improvements thereon, including but not limited to buildings existing on any properties thereon;

4) Soil Classification Map, with a minimum scale of one (1) inch equals two hundred (200) feet, identifying soils and listing limiting factors of applicable soils;

5) A preliminary geotechnical report to the extent environmentally sensitive land is to be disturbed; and

6) A traffic impact study.

O. The Master Plan shall consist of the following information:

1) Drawings at a scale no smaller than one (1) inch equals one hundred (100) feet and text needed to clearly show all of the following:

a) The name of the proposed development and names and addresses of the landowner, the developer and the persons who prepared the plan;

b) The proposed street pattern including the names, paving width and rights-of-way of all streets and the widths and locations of easements or areas to be dedicated;

c) The layout of lots or parcels, where appropriate, including dimensions, lot areas, number and building lines;

DRAFT

d) Grading Plan for the entire site;

e) The location, predicted use, height, bulk and square footage for every structure on the proposed lots;

f) The location of all off-street parking spaces and the total number of spaces to be provided, in accordance with the requirements of Article IX, Off-Street Parking and Loading, of this Ordinance;

g) The location, size and kind of improvements proposed for all common open space and recreation facilities, together with proposed ownership and maintenance arrangements for such open space;

h) A Landscaping Plan; and

i) A preliminary plan showing anticipated location and width of walks, sidewalks and trails, and the use of trails where they are not limited to pedestrian use.

2) The following text or graphic materials:

a) The substance of anticipated covenants, grants, easements or other restrictions proposed;

b) The extent to which the proposed Master Plan varies from requirements of the underlying zoning district and other zoning and subdivision and land development regulations otherwise applicable to the subject property;

c) A tentative development schedule, where lot development is to be phased over a period of years, not to exceed ten (10) years from the date of Master Plan Approval, showing proposed times for the filing of submission of land development applications for each lot within the proposed Master Plan area;

d) A written narrative setting forth the applicant's reason for filing a Master Plan and demonstrating how the Master Plan complies with the purpose of this Article. The narrative should address the major features of the Master Plan and may contain such non-land use information as estimates of taxes paid to all local government units, estimates of municipal and school districts costs and a benefit analysis;

e) Illustrative building types, elevations, building location, typical cross section and rendering of front elevations of proposed buildings, at a minimum scale of one-eighth (1/8) inch equals one (1) foot;

f) The architectural and design standards shall set forth the requirements for exterior building, materials, windows, general site design and compatibility with abutting structures. The standards shall set forth whether said requirements will be included in covenants running with the land and whether the covenants will retain design approval control; and

DRAFT

g) The Master Plan Requirements of this Article shall be in lieu of all setback, height, land disturbance and density requirements of this Ordinance.

§705 Other Agencies to Review

The Zoning Officer shall forward one (1) copy each of the Master Plan application to the Planning Commission and all appropriate governmental agencies. Council shall not hold the conditional use hearing until the expiration of thirty (30) days from the date the copies of the application for development were forwarded to all appropriate government agencies.

§706 Master Plan Approval

Council shall approve or disapprove the Master Plan in accordance with Article VI, Planned Residential Development, and §611, §612 and §613.

§707 Application for Final Master Plan Lot Approvals

Application for approval of a final land development on each lot shown in the finally approved Master Plan shall be submitted as a land development plan pursuant to the procedural provisions of the Subdivision and Land Development Ordinance.

A. The finally approved Master Plan shall control all bulk, height, lot coverage, land disturbance, density, landscaping, grading, location and type of storm water management and setback requirements;

B. The final land development application for a lot in the Master Plan shall include the material as outlined in the Subdivision and Land Development Ordinance. Additionally, the applicant shall submit supplementary data, which shall include:

1) Any covenants, grants of easements or other restrictions to be imposed on the use of land and structures; and

2) Provision for the maintenance, ownership and operation of all landscaping areas, common open spaces, private roadways, storm water management facilities and common recreation facilities. The provisions shall be covenants running with the land and shall be in a form approved by the Municipal Solicitor.

§708 Guarantee of Improvements (Performance Bond)

The improvements required and the security to guarantee their installation shall be in accordance with the Subdivision and Land Development Ordinance for each Master Planned lot at the time each receives final approval, as part of the Developer's Agreement. In addition, thereto, if all road improvements shown on the Master Plan are not to be installed upon completion of the development of the lot applied for, the applicant shall submit a traffic report showing what, if any, additional traffic improvements are required for such lot or phase being approved. The applicant shall be responsible for all such additional improvements related to the lot/phase or in lieu thereof, may complete all Master Plan road improvements.

§709 Master Plan Site Requirements and Uses

A. Site Requirements - property subjected to Master Plan approval shall, at the time of first approval, meet the following site requirements:

DRAFT

1) Ownership - the entire site for the Master plan shall:

    a) Be owned or controlled (i.e. contract purchaser, ground lease) by the developer; or

    b) The owners of all the land shall submit a document in recordable form and in a form approved by the Municipal solicitor binding all owners to comply with the Master plan approved by the conditional use approval.

2) Minimum site - the site subject to the master plan shall not be less than ten (10) acres;

3) Frontage - the minimum frontage abutting on a public right-of-way shall not be less than one hundred and fifty (150) feet;

4) Access - the lot must provide for direct points of ingress and egress from public roads or access to a road proposed in the Master Plan area, to assure convenient and safe access, which will not cause undue congestion or hazard;

5) Each lot shall be of such a character to avoid danger to health or peril from fire, flood or other hazard.

6) Where a Planned Development abuts or contains an existing or proposed major traffic street, the Governing Body may require marginal access streets, rear service alleys, reverse frontage lots or such other treatment as will provide protection for abutting properties, reduction in the number of intersections with major streets, and separation of local and through traffic.

B. Uses - only those uses permitted in the underlying zoning district(s), or as listed below, shall be permitted in a Master Plan area. Uses permitted shall include:

1) Permitted uses;

2) Special exceptions;

3) Conditional uses, except that “other uses” may not be included in an application until Council has approved the use pursuant to §317; and

4) Apartment uses which may be permitted above the first/ground floor of a building subject to the additional requirements of §710.C.

C. Bulk and Area Requirements - property subjected to master plan zoning approval shall, at the time of first approval, meet the following Bulk and Area Requirements:

1) Space between buildings - every principal structure shall be separated by not less than thirty (30) feet from any other principal structure on the site;

2) Minimum building setback - the minimum setback requirements for the perimeter of a master planned development shall comply with the minimum setback requirements of the underlying zoning district;

3) Landscaping for developments adjacent to other non-residential developments or uses:

DRAFT

a) No structures or uses, including but not limited to buildings, accessory structures, parking spaces, curbs, access drives and lighting device, shall be located closer than ten (10) feet to any front, side or rear lot line except that access drives may be located in the front yard if required by, Municipal Ordinance;

b) A minimum of one (1) shade tree and two (2) low-level plantings shall be planted for each ten (10) linear feet of landscape area.

4) Landscaping for developments adjacent to residential developments or uses.

a) No structures or uses, including but not limited to buildings, accessory structures, parking spaces, curbs, access drives and lighting devices, shall be located closer than forty (40) feet to any front, side or rear lot line;

b) A minimum of one (1) shade tree and two (2) low-level plantings shall be planted for each ten (10) linear feet of landscape area;

c) In addition to the requirement in §709.C.4)b), a row of low-level evergreen shrubs or hedges shall be planted in the buffer yard that shall provide a year-round visual screen capable of acting as a barrier to light beams emanating from the headlights of vehicles. These low-level shrubs and hedges shall be of such height that a person facing a vehicle with the shrubs, hedges or mounds between that person and the car can observe the vehicle's low-beam lights only as a result of the diffused or reflected light from the headlights and not because the main, direct beam from those lights was observable;

5) Height Regulations - the maximum height of a structure shall not exceed the underlying zoning district.

§710 Specific Standards and Criteria

A. A planned non-residential development shall be permitted as a conditional use subject to the following expressed standards and criteria:

1) When the proposed Master Plan departs from requirements of this Ordinance and the Subdivision and Land Development Ordinance otherwise applicable to the subject property, but such departures are in the public interest and promote the public's health, safety and welfare;

2) The proposals for the maintenance and conservation of any proposed common open space, buffer yard and landscaping areas are reliable and legally enforceable and the amount and extent of improvements of such open space and landscaping areas are adequate with respect to the purpose, use and type of development proposed;

3) The physical design of the Master Plan adequately provides for public services, traffic facilities and parking, light, air, recreation and visual enjoyment;

4) The total environment of the Master Plan is harmonious and consistent with the zoning district in which it is located;

DRAFT

5) The proposed Development Plan will afford a greater degree of protection of natural watercourses, topsoil, trees, and other features of the natural environment, and prevention of erosion, landslides, siltation and flooding than if subject property were developed in accordance with the provisions of the Zoning and Subdivision Ordinances which otherwise apply;

6) The proposed use shall not involve any element or cause any condition that may be dangerous, injurious, or noxious to any other property of persons, and shall comply with the Performance Standards of §811;

7) In the case of a Development Plan which proposes development over a period of years, the Development Plan will provide at each stage of development a sufficient proportion of open space, planned facilities and amenities, and other improvements and conditions as required in this Article and as intended to protect the interests of the public and of the residents of the planned residential development in the integrity of the development plan.

B. In evaluating the conditional use criteria, the applicant shall demonstrate, and Council shall consider the following additional factors where applicable:

1) The degree to which development pursuant to a cohesive Master Plan exceeds standards of existing development in the zoning district(s) under uncoordinated land development plans;

2) The degree to which a Declaration of Covenants, Conditions and Restrictions (CCR) is created and recorded against the property to govern development. Examples of items that would be included in the CCR may include, but not limited to:

a) Architectural Design Standards (i.e. materials, colors, quality of construction, maintenance, repair);

b) Landscaping Standards;

c) Signage Standards;

d) Lighting Standards; and

e) Other items deemed appropriate by the Municipality.

C. Apartment use above the first/ground floor of any building may be permitted in a Master Plan area when:

1) The total square footage devoted to the apartment use in the Master Plan area shall not exceed seventy-five percent (75%) of the gross floor area of the Master Plan;

2) Adequate protections from noise, light, vibration, hours of operation, truck and equipment traffic and surrounding master planned uses are provided. It is the intent of this subsection that residential uses are secondary to the uses permitted in the zoning district(s) and such residential use shall be subject to impacts that would not be acceptable in residentially zoned areas;

DRAFT

3) The specific conditional use provisions in §504, shall be complied with where applicable and;

4) The height of an apartment structure shall not exceed sixty (60) feet, or the maximum height permitted in the underlying zoning district, whichever is less.

§711 Common Open Space

A. Common open space is encouraged in a Master Plan. The common open space shall be so dedicated or otherwise preserved and maintained to always remain open and available for use by the occupants of the development area. The land and facilities to be used for common open space may be acceptable if the land and facilities shall be deeded to an organization representing the landowners of the development. The organization shall covenant to operate and maintain the land and facilities for their originally intended use. The organization shall not be dissolved nor shall it dispose of the common open space, by sale or otherwise, without guaranteeing to the Municipality's satisfaction the maintenance of the common open space and first offering to dedicate the common open space to the public. The Municipality is under no obligation to accept dedication of this common open space for public use.

B. Common open space maintenance.

1) The applicant may propose covenants containing substantially the same provisions as set forth in §617 J; or

2) The applicant shall establish maintenance and operation requirements common to all lots in the Master Plan area and provide for easements, covenants and restrictions in recordable form, which will guarantee future maintenance and operation. The Municipality shall, in form and substance, approve such covenants, easements, and restrictions.

C. Buffer yard and common landscaping.

1) The buffer yards and common landscaping shown on the approved Master Landscaping Plan shall be maintained by the landowner, if the lots are not sold, or by the organization created to manage common open space, if the same has been created, or a similar such organization if there is no common open space. The organization shall have the right to charge each lot owner for the cost thereof and to lien such lot in default of such payment.

§712 Public Improvements

All streets, sidewalks, lighting and drainage facilities therewith shall be designed and constructed in keeping with the requirements of all applicable Municipal ordinances.

§713 Variances and Modifications

When approving a land development plan within a Master Plan area on an individual lot as a land development plan, Council, upon the request of the applicant, may approve special, reasonable modification thereto as will not be contrary to the public interest. Where an applicant requests a special, reasonable modification, the procedure outlined in the Subdivision and Land Development Ordinance for granting modifications shall be strictly adhered to and followed. Any changes not part of land development approval, shall only be made by the Zoning Hearing Board as a variance if requested by an applicant. Can waivers or modifications be granted by Council or only variances???

DRAFT

§714 Enforcement

To ensure the integrity of the land development plan and to guarantee that modifications in the plan do not adversely affect the public interest, the enforcement and modification of the provisions of the development plan as finally approved, whether they are recorded by plat, covenant, easement or otherwise, shall be subject to the following provisions:

A. Provisions in favor of the Municipality - an express provision of, or commitment in, the Master Plan relating to the use, bulk and location of buildings and structures, the quantity and location of common open space, except as otherwise provided in this Article, and the intensity of use shall run in favor of the Municipality. As provided by law, these provisions shall be enforceable by law or in equity by the Municipality without limitation on any powers or regulations otherwise granted by the Municipality by law;

B. Modifications - all those provisions of the Master Plan relating to the operation of the Master Plan property authorized to be enforced by the Municipality under this section may be modified, removed or released by the Municipality, except grants or easements relating to the service or equipment of a public utility, subject to the following conditions:

1) No such modification, removal or release of the provisions of the Master Plan by the Municipality shall affect the rights of the owners or tenants of the planned nonresidential development to maintain and enforce those provisions, at law or equity, as provided in this Ordinance;

2) No modification, removal or release of the provisions of the Master Plan by the Municipality shall be permitted except upon the findings by Council following public notice. These findings shall indicate that the changes are consistent with the efficient development and preservation of the entire planned nonresidential development, do not adversely affect the enjoyment of land abutting upon or across the street from the planned nonresidential development or the public interest and are not granted solely to confer a special benefit upon any person;

3) The applicant may propose, and Council may consider, modification to the planning scheme contained within the Master Landscaping Plan from time to time provided, however, the intent of the Master Landscaping Plan is maintained and the buffer yard screening is not diminished; and

4) From time to time, the use of any structure on a Master Plan lot may be changed to another use permitted in the zoning district upon approval of a zoning occupancy permit in accordance with §1407. Where the use is a special exception or conditional use, the change shall be submitted to Council or the Zoning Hearing Board for review and approval. Where express conditions of that use conflict with the finally approved Master Plan, the applicant shall submit an updated Master Plan to Council for approval showing either the conflicts between the use's express conditional use requirements and the Master Plan requirements and requesting a modification of such express conditional use requirements or the changes in the Master Plan necessary to meet the express use conditions. Where the use is a conditional use, the applications may be combined into a single proceeding. Where a use is a special exception, Council shall first approve the Master Plan update prior to Zoning Hearing Board approval. Any changes in the physical layout of a Master Plan lot shall only be approved as a land development unless the Zoning Officer determines the same is de minimis and does not require any additional parking spaces.

DRAFT

C. Release of rights - owner(s) of the planned nonresidential development may, to the extent and in the manner expressly authorized by the provisions of the Master Plan, modify, remove or release their rights to enforce the provisions of the Master Plan, but no such action shall affect the right of the Municipality to enforce the provisions of the Master Plan in accordance with the provisions of this Ordinance; and

D. Submission of an updated Master Plan shall not extend the effective time period for the Master Plan as set forth in §704.O.2)c).

~ END OF SECTION ~

DRAFT

THIS PAGE INTENTIONALLY LEFT BLANK

DRAFT

§801 Purpose
§802 Accessory Structures and Uses
§803 Air Conditioning Systems/Mechanical Equipment
§804 Drive-Thru Establishment
§805 Drive-Thru Restaurant
§806 Drive-In Restaurant
§807 Fences and Hedges
808 Food Trucks
§809 Landscaping, Buffer Yards and Screening
§810 Laundromat
§811 Medical Clinic
§812 Mobile, Modular, Industrialized or Manufactured Homes on Individual Lots
§813 Municipal Waste Landfill
§814 Outdoor Dining Area, Accessory to the Principal Use
§815 Outdoor Storage
§816 Performance Standards
§817 Portable Outdoor Storage
§818 Recreational Vehicles and Motorized Recreational Equipment
§819 School
§820 Solar Energy Facility, Accessory to the Principal Use
§821 Swimming Pools, Accessory to the Principal Use
§822 Vector Control

SECTION NUMBERING IS NOT CORRECT

§801 Purpose

The Supplemental Regulations regulate activities, uses, structures, conditions and treatments that may be present on a property whether or not a principal building or use is present. These restrictions are applied to mitigate impacts including noise, off-site parking, traffic, unsightliness, odors, dust and fumes. These regulations contribute to and promote the health, safety, comforts, conveniences, and/or necessities of the property's occupants, the immediate neighborhood and/or the entire community.

§802 Accessory Structures and Uses

A zoning permit shall be required for every accessory structure and use. A review of the proposed land development plan as required in the Subdivision and Land Development Ordinance shall be required for uses or structures accessory to principal use other than single-family homes, townhouses and two-family homes.

A. Impermanent structures or structures which are to be comprised of makeshift materials or structures which are subject to extreme weathering and unsightly conditions shall not be permitted. See additional regulations in: ARTICLE III – DISTRICT REGULATIONS.

§803 Air Conditioning Systems/Mechanical Equipment

A. All building mechanical systems such as air-conditioning units, exhaust systems, satellite dishes, fire escapes, elevator housings, and other similar elements shall be integrated into the overall design and character of the building.

B. Screening

DRAFT

1) Mechanical equipment shall be fully screened from public streets, paths, private streets, and abutting lots;

2) Ground-mounted mechanical equipment shall be screened from public streets and abutting lots to a height sufficient to screen the equipment. When solid screening is used, the materials shall be compatible with the building materials;

3) All roof-mounted mechanical equipment shall be screened from view or isolated so as not to be visible from any public right-of-way, measured from a point five (5) feet above grade; and

4) Roof screens, when used, shall be coordinated with the building to maintain a unified appearance.

§804 Crematory

A. A crematory established for cremation of human or animal remains shall be located on property not less than one acre;

B. The crematory operator/owner shall provide the municipality with the necessary certifications to operate the crematorium and prior to issuing a building permit, a copy of the required PA DEP General Permit shall be provided. The crematorium shall be operated in conformance with all local, state and federal laws;

C. The crematory building shall be setback (50) feet from all other property lines, and shall include a (25) foot vegetative buffer from all adjacent uses;

D. Air emission standards shall not exceed the rates described in the table below Table 801;

E. All emission must also meet the requirements of the Pennsylvania Department of Environmental Protection as part of their permitting requirements;

F. Emission control devices. An after burner or secondary chamber shall be used to achieve a minimum temperature of 1,800° F. prior to changing the unit and throughout the cremation cycle. The crematory operator/owner must install, maintain and operate additional control devices to assure that emissions standards are met. It is the responsibility of the operator/owner to demonstrate that the installation will ensure compliance with emission regulations and standards;

G. The crematory shall be limited to operating between 7:00 a.m. to 7:00 p.m., Monday through Friday;

H. When cremations are taking place, an operator certified to operate the crematorium shall be on site;

I. Necessary certifications to operate a crematory shall be provided to the municipality and shall comply with all local, state, and federal law; and

J. Bodies shall be cremated only in wooden/crate containers, and plastic that does not create toxic emission (no halogenated plastics).

Table 801. Crematory Pollutant Emissions.

Pollutant	Limit	Units	Average Period
Particulate matter	0.030	Grains/dry standard cubic foot (gr/dcsf) of exhaust gases	3 hours
Visible emissions	0%	Opacity	6 minutes

DRAFT

Carbon monoxide	20	Parts per million (ppm)	1 hour
Mercury	0.050	Milligrams per normal cubic meter (mg/Nm3)	3 hours
Dioxins/furans	400	Nanograms per body TEQDF-WHO98	3 hours

§805 Drive-Thru Establishment (i.e. financial institutions, food stores, pharmacies)

A. A traffic impact study shall be required;

B. Stacking / queuing space shall be provided as per the following chart:

Table 802 Drive-Thru Establishment Stacking/Queuing

Activity Type	Minimum Stacking Spaces	Measured From
Automated Teller Machine	3	Teller
Bank Teller Lane	4	Teller or Window
Gasoline Pump Island	2	Pump Island
Pharmacy	4	Window
Oil Change and Quick Lube	3	Per Bay
Other	Determined by Zoning Officer	

C. See diagram in Section 805 Drive-Thru Restaurants;

D. No pedestrian crossing of the stacking lane shall be permitted;

E. The minimum stacking lane width shall be ten (10) feet per lane;

F. A maximum of three (3) stacking lanes are permitted, one (1) per serving window;

G. A minimum ten (10) foot wide bypass lane shall be provided for vehicles to bypass the stacking lane(s) or to otherwise circulate through the parking lot;

H. Stacking lanes shall not inhibit site pedestrian crossing/walkways, traffic aisles, parking spaces, or roadway right-of-ways;

I. Provide at least twenty (20) feet of ten (10) foot-wide lane after the serving window and before the nearest intersecting site pedestrian crossing/walkway, traffic aisle, parking space, or roadway right-of-way following the serving window to permit patrons the opportunity to verify they have received the correct order;

J. A circulation plan through the drive-thru lane shall be provided with turning templates to accommodate a design vehicle to the Municipality's judgement;

DRAFT

K. Stacking shall not interfere with the free flow of traffic within the lot and shall not interfere with the use of any required parking spaces. Stacking shall not cause the stopping of vehicles on any public right-of-way or overflow onto adjacent properties;

L. The vehicular entrance and approach to the drive-up window shall be clearly delineated by markings, striping and or signage;

M. Vehicular circulation into and through the property, and the location of parking, shall be obvious to motorists via pavement markings and/or directional signs;

N. No drive-thru lane window shall be located in a front yard;

O. The site shall front on an arterial or collector road;

P. Drive-Thru establishments proposed on parcels within a planned non-residential development shall have access only from the interior circulation system within the planned non-residential development;

Q. All exterior speaking/microphone systems shall be arranged and/or screened to prevent objectionable noise impact on adjoining properties;

R. Sufficient trash receptacles shall be provided within and outside of the primary structure to accommodate waste generated from the establishment;

S. The site shall be designed to minimize disruptions to pedestrian traffic and to provide a safe sight distance for motorists;

T. Areas not paved or occupied by structures shall be landscaped and maintained, in accordance with § 808 Landscaping, Buffer Yards and Screening;

U. The use of the site and the access to it shall not endanger the public health, safety and general welfare; and

V. The use shall not create detrimental impacts on the surrounding properties, taking into consideration the probably of traffic generation, noise, hours of operation, location of the use, lighting glare and parking demand.

§806 Drive-Thru Restaurant

A. A traffic impact study shall be required;

B. See diagram at the end of this section;

C. A minimum of one-hundred and forty (140) feet of stacking lane is required for drive-thru customers per serving window measured from the center of the serving window to the point at which the stacking lane inhibits pedestrian crossing/walkways, traffic aisles, parking spaces, or roadway rights-of-way. Measurement shall be made along the centerline of the stacking lane;

D. No pedestrian crossing of the stacking lane shall be permitted;

DRAFT

E. A minimum of eighty (80) feet of the stacking lane must be provided between the center of the order station and the center of the serving window, measured along the centerline of the stacking lane;

F. The minimum stacking lane width shall be ten (10) feet per lane;

G. A maximum of three (3) stacking lanes are permitted, one (1) per serving window;

H. A minimum ten (10) foot wide bypass lane shall be provided for vehicles to bypass the stacking lane(s) or to otherwise circulate through the parking lot;

I. In order to permit vehicles to exit the stacking lane prior to ordering there shall be no impediment to vehicles escaping the stacking lane prior to or at the order station. While not required after the order station, permitting escape from the stacking lane to the bypass lane is encouraged;

J. Stacking lanes shall not inhibit site pedestrian crossing/walkways, traffic aisles, parking spaces, or roadway right-of-ways;

K. Provide at least twenty (20) feet of ten (10) foot-wide lane after the serving window and before the nearest intersecting site pedestrian crossing/walkway, traffic aisle, parking space, or roadway right-of-way following the serving window to permit patrons the opportunity to verify they have received the correct order;

L. A circulation plan through the drive-thru lane shall be provided with turning templates to accommodate a design vehicle to the Municipality's judgement;

M. Stacking shall not interfere with the free flow of traffic within the lot and shall not interfere with the use of any required parking spaces. Stacking shall not cause the stopping of vehicles on any public right-of-way or overflow onto adjacent properties;

N. The vehicular entrance and approach to the drive-up window shall be clearly delineated by markings, striping and or signage;

O. Vehicular circulation into and through the property, and the location of parking, shall be obvious to motorists via pavement markings and/or directional signs;

P. No drive-thru lanes window shall be located in a front yard;

Q. The site shall front on an arterial or collector road;

R. Drive-Thru restaurants proposed on parcels within a planned non-residential development shall have access only from the interior circulation system within the planned non-residential development;

S. All exterior speaking/microphone systems shall be arranged and/or screened to prevent objectionable noise impact on adjoining properties;

T. All exterior seating/play areas shall be completely enclosed with a barrier designed by a professional engineer or architect to withstand adequate separation from vehicular movement or possible penetration;

DRAFT

U. Sufficient trash receptacles shall be provided within and outside of the primary structure to accommodate waste generated from the establishment;

V. The site shall be designed to minimize disruptions to pedestrian traffic and to provide a safe sight distance for motorist;

W. Areas not paved or occupied by structures shall be landscaped and maintained, in accordance with §808 Landscaping, Buffer Yards and Screening;

X. The use of the site and the access to it shall not endanger the public health, safety and general welfare; and

Y. The use shall not create detrimental impacts on the surrounding properties, taking into consideration the probability of traffic generation, noise, hours of operation, location of the use, lighting glare and parking demand.

Figure 806. Typical Drive-In Diagram

DRAFT

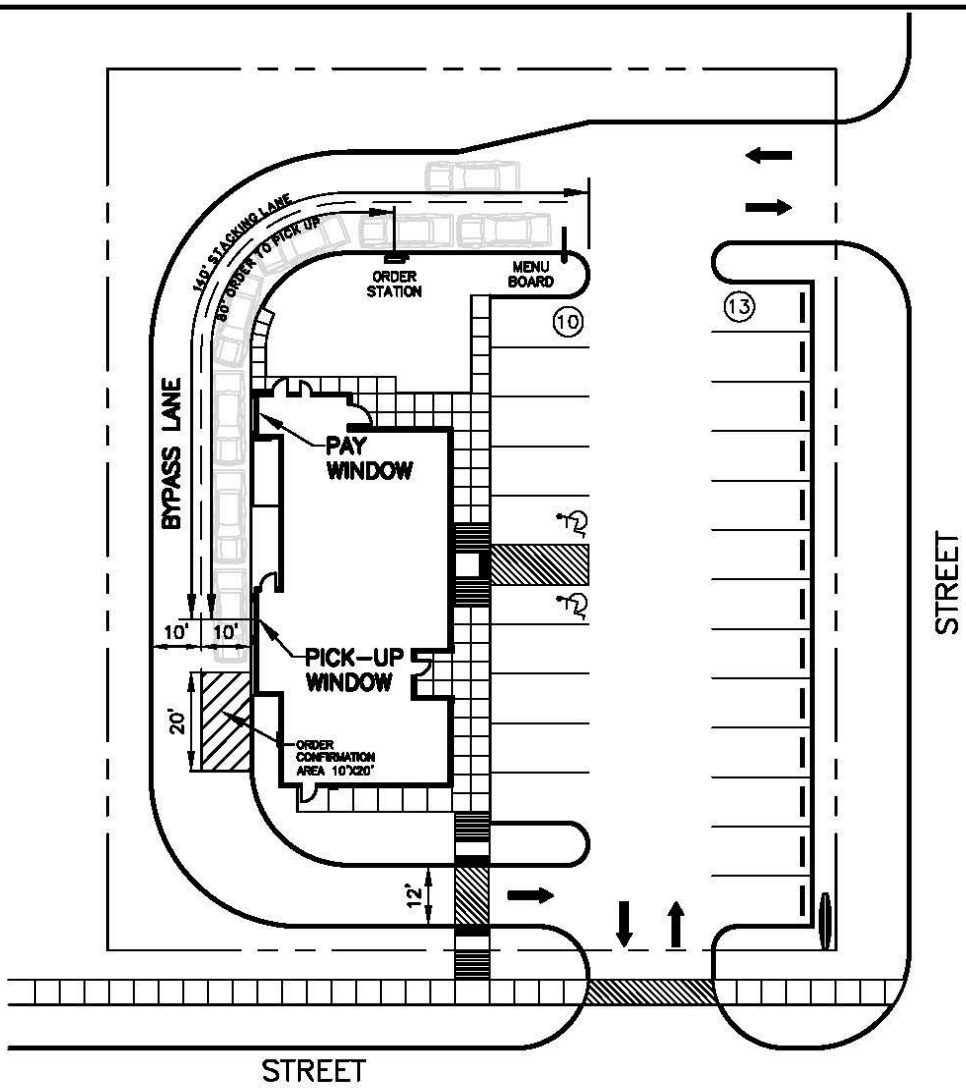

NOTES:

1. MINIMUM ONE HUNDRED FORTY FEET (140') OF STACKING LANE.
2. MINIMUM OF EIGHTY FEET (80') BETWEEN ORDER STATION AND PICK-UP WINDOW.
3. MAXIMUM OF THREE (3) STACKING LANES.
4. PROVIDE BYPASS LANE FOR VEHICLES TO ESCAPE STACKING LANES.

REVISIONS			TYPICAL DRIVE-IN DIAGRAM	MONROEVILLE
NO.	DESCRIPTION	DATE		

§807 Drive-in Restaurant

A. See: "Drive-Thru restaurant".

§808 Fences and Hedges

A. No fence or wall shall be erected replaced or altered unless an application has been made to, and a permit issued by, the Zoning Officer;

B. A fence may be erected into any required side or rear yard if the fence is no more than six (6) feet in height for residential uses. A fence may be erected from the front building line of the principal structure if the fence is at least fifty percent (50%) open and no more than four (4) feet in height;

C. A chain-link-type fence not more than ten (10) feet in height may be erected in any required yard for schools, playgrounds or parks;

D. A fence of the chain link type no more than ten (10) feet high may be erected in any required yard for industrial or commercial uses;

E. A solid fence no more than ten (10) feet high may be erected in any required yard for commercial or industrial uses with the approval of the Zoning Officer;

F. Fences are not subject to the minimum yard setback requirements and may be located up to the property line;

G. Street Intersections - no fence shall be installed that obstructs sight distance at street intersections or interferes with the required clear sight triangle. *See article II. Definitions "Clear-Site Triangle;*

H. In no area of any yard shall fencing ordinarily used for construction activity, such as silt fences or temporary construction fences be permitted, except during the time when such construction activity is being performed;

I. Fences shall be constructed from commercially available and accepted construction materials. Pallets, garbage, debris, construction waste cannot be oriented or aligned to create a fence;

J. All fences shall be so installed so that the finished side shall face outward; all bracing shall be on the inside of the Fence;

K. All existing fences and walls shall be maintained and, when necessary, repaired or replaced;

L. Fences and all supporting Structures must be entirely on the property of the party erecting the fence and shall not encroach upon a Public Right-of-Way;

M. Fences are not subject to the minimum yard setback requirements and may be located up to the property line, except in areas where they are adjacent to public streets, in which case fences shall be required to be located a minimum of two (2) feet from the back of curb or edge of pavement. The finished side of the fence shall face the adjoining property or public street where applicable;

DRAFT

N. Any fence, hedge, post, mailbox, sign, tree or shrub located in the public right-of-way or other recorded easement is placed at the owner's risk and may be ordered to be removed by the Municipality for expansion or maintenance of public services; and

O. The Zoning Officer may require more stringent controls on the placement of hedges and fences where, in the opinion of the Zoning Officer, public safety, pedestrian or vehicular traffic is involved. Fences and hedges shall not interfere with maintaining sight distances for vehicles approaching street intersections or the right-of-way of such intersection.

§809 Film Crew/Movie Production

A. Licensing

1) Only requires a Zoning Permit and Building Permit (if set construction or structures are to be built).

§810 Food Trucks

A. Licensing

1) Any food truck vehicle shall be required to obtain all necessary registrations and licenses to operate

2) Food Trucks are subject to verification and inspection, to be conducted by the township Police Department.

B. Location:

1) A mobile food vendor shall not be located at a stationary location for a duration exceeding eight consecutive hours and cannot exceed more than eight hours during any twenty-four-hour period. The mobile food vendor shall be open and operating during the entire period that the mobile food vendor is located at a stationary location within the Township.

2) A mobile food vendor shall not conduct sales in congested areas where the operation impedes vehicular or pedestrian traffic.

3) A mobile food vendor shall not cause any congestion of traffic flow, and, if vehicular traffic or pedestrian flow becomes impeded, the vendor shall immediately and without delay vacate the area so as to allow for the free flow of traffic and relief of the congestion.

4) No mobile food vendor shall locate on any private property without written permission from the property owner to do so, and must comply if asked to leave by the property owner.

a) A copy of the written permission to operate in a specific location signed by the private property owner, including a contact phone number for verification, shall be included with the license application.

DRAFT

b) A copy of such written permission shall be kept in the mobile vending unit and produced upon request.

5) A five-foot clear space shall be maintained around the mobile food vending unit at all times.

6) No mobile food vendor shall be allowed to conduct food sales in the public road right-of-way.

C. Time

1) A mobile food vendor shall not be permitted to conduct sales between the hours of 12 a.m. and 6 a.m.

D. Signs

1) A “no smoking” sign must be posted next to the order window.

E. Waste

1) Vendors must provide a portable trash receptacle for collection of waste from their customers and waste must be removed from the location of the mobile vending unit daily without using public waste containers or receptacles.

a) Each Vendor shall be responsible for proper disposal of solid waste and wastewater in a sanitation facility legally accessed by the vendor.

2) Vendors shall not dispose of grease or other liquid waste by depositing or draining the same into the storm drains, sewer drain outlets, tree pits or sidewalk areas, or any public space, including the ground or public roadways.

3) All areas must be cleaned following each sales period within a minimum of 20 feet of the sales location.

F. Noise

1) Continuous load music or repetitive sounds shall not project from the mobile unit while parked or stopped, except those created by the normal operation of equipment typically associated with mobile food vending during the hours of operations.

2) The provisions of the Municipalities Noise Ordinance must be met during all periods of operation

G. Fire Safety

1) Proper electrical power shall be maintained and installed as per the International Electrical Code. Extension cords running from any residential living space for power will not be allowed. Municipal-owned power sources may not be used without the express written consent of the Municipality.

2) All vehicles shall be at a minimum fifteen (15) feet from any structure.

DRAFT

§811 Landscaping, Buffer Yards and Screening

A. General Provisions

1) All landscaped areas shall be permanently landscaped and maintained in good condition;

2) All areas of a lot not covered by building or impervious material shall be maintained as landscaped or natural areas;

3) All deciduous trees required in this section shall be a minimum of one and one-half (1½)-inch caliper DBH in size at planting, unless specified otherwise;

4) All evergreen trees required by this section shall be a minimum of six (6) feet in height, measured from grade at planting, unless specified otherwise;

5) All shrubs required by this section shall be a minimum twenty-four (24) inches in height at planting, unless specified otherwise; and

6) Trees, shrubbery and other foliage shall be trimmed if, in the opinion of the Zoning Officer, the tree, shrubbery or other foliage shall be an impediment to pedestrian or vehicular traffic movement or visibility, or that said trimming shall assure easy, convenient access to fire hydrants and shall prevent the harboring of snakes, rodents or other vermin.

B. Landscaping Plan Guidelines and Requirements

1) The following general guidelines shall be used in developing all landscaping plans:

a) The landscaping plan shall be prepared by a Landscape Architect (IS THIS TOO RESTRICTIVE???) licensed by the Commonwealth of Pennsylvania;

b) Plants selected shall be suited to the climate and region as well as the geologic and topographic conditions of the site. Protection and preservation of native plant materials and natural areas are encouraged;

c) At least one (1) deciduous tree shall be planted for each one thousand (1,000) square feet of gross floor area in conjunction with non-residential development. The planting of said tree within the development shall be completed prior to the approval and issuance of a zoning occupancy permit;

d) At least one (1) deciduous tree shall be planted for each residential dwelling unit. The planting of said tree within the development shall be completed prior to the approval and issuance of a zoning occupancy permit;

e) All yard areas not utilized for parking areas, streets, driveways, and the planting of trees and shrubs shall have sod installed, be seeded, or have landscaping installed within two (2) weeks after construction activities are completed, unless construction activities are completed from November 1st through May 1st. In such case, the required tree planting

DRAFT

shall occur within two (2) weeks of April 1st and sod or seeding shall occur within two (2) weeks of May 1st; and

f) It shall be the responsibility of the landowner to assure the continued growth of all required landscaping and/or replace the same with material of comparable size and character in the event of freezing, drought, vandalism, disease or other reasons that may have caused the discontinued growth of the required trees, shrubs and other vegetation. Dead and dying plants shall be replaced no later than sixty (60) days after municipal notification or within the subsequent planting season as approved by the Municipality.

C. Landscape Plan Contents

1) Landscaping plans shall be drawn to scale, including dimensions and distances, and shall clearly delineate:

a) Plant materials, including trees, shrubs, ground cover, grass and other vegetation, shall be depicted clearly on the plan. In addition, plants shall be labeled by botanical name, common name, caliper or container size, spacing and quantities in each group;

b) Property lines and street names;

c) Streets, driveways, walkways and other paved areas;

d) Pools, ponds, water features, lighting fixtures, fences and retaining walls;

e) Existing and proposed buildings and structures, including elevation;

f) Natural features, including, but not limited to, rock outcroppings and existing plant materials that will be preserved;

g) Tree staking, plant installation, soil preparation details and all other applicable planting and installation details;

h) Calculation of the total landscaped area;

i) All required buffer yards with proposed plantings;

j) All required parking lot landscaping with proposed plantings; and

k) All required planting independent of the buffer yard or parking lot requirements.

D. Design and Construction

1) Specify in cut areas to be treated as lawn that rock shall be covered with twelve (12) inches minimum of suitable subsoil below topsoil;

2) Specify that depth of topsoil be a minimum of four (4) inches with a desirable minimum of six (6) inches. The maximum depth shall be twelve (12) inches, placed in a uniform depth to prevent uneven settlement;

DRAFT

3) Specify that topsoil shall not be stripped, placed or worked while frozen or wet; and

4) Specify and/or detail that grade of topsoil shall be one half (½) inch to three-fourths (¾) inch below top of walks and curbs to provide positive drainage off walks.

E. Maintenance Plan

1) A landscape maintenance plan shall accompany every land development application;

2) All required planting shall be permanently maintained in good condition, and when necessary, replaced with new plant material to ensure continued compliance with these standards;

3) For the purpose of enforcement, the property owner shall be responsible for maintenance;

4) Maintenance shall include watering, weeding and pruning; and

5) Vegetation / landscaping may be required to be trimmed, if in the opinion of the Zoning Officer, trees, shrubs or other plant material is negatively impacting adjoining property owners, pedestrians, or vehicular traffic.

F. Plant Materials Specifications

1) All trees shall be planted and maintained to grow upright and plumb and the tree pit mulched;

2) The use of synthetic vegetation (i.e. artificial turf, plastic plants) shall not be allowed for any required landscaping, unless approved during Planning Commission and Council review;

3) The applicant or developer shall demonstrate removal of any trees or natural vegetation is necessary for the imminent and orderly development of the property, unless such removal is part of a forestry operation;

4) Exotic and Invasive Plant List

The following plants shall not be utilized –

Table 803. Exotic and Invasive Plant List

Scientific name	Common name
Ajuga reptans L.	Bugleweed
Ailanthus altissima (Mill.) Swingle	Tree of Heaven
Albizia julibrissin Durz.	Mimosa
Allium vineale L.	Field garlic
Ampelopsis brevipedunculata (Maxim.) Trautv.	Porcelain-berry
Artemisia vulgaris L.	Mugwort, common wormwood
Arthraxon hispidus (Thunb.) Makino	Hairy jointgrass
Arundo donax L.	Giant reed

DRAFT

Baccharis halimifolia L. (*)	Silverling, groundsel tree
Berberis thunbergii DC	Japanese barberry
Bromus catharticus Vahl	Bromegrass, rescue grass
Bromus commutatus Schrad.	Meadow brome
Bromus japonicus Thunb. ex Murray	Japanese bromegrass
Bromus secalinus L.	Rye brome
Bromus tectorum L.	Thatch bromegrass, cheat grass
Broussonetia papyrifera (L.) L'Her. ex Vent.	Paper mulberry
Buddleia davidii Franch	Butterfly bush
Cardiospermum halicacabum L.	Balloon-vine
Cayratia japonica (Thunb. ex Murray) Gagnep.	Bushkiller
Celastrus orbiculatus Thunb.	Asian bittersweet
Centaurea biebersteinii DC	Spotted knapweed
Chrysanthemum leucanthemum L.	Ox-eye daisy
Cichorium intybus L.	Chicory
Cirsium vulgare (Savi) Ten.	Bull thistle
Clematis terniflora DC (=C. dioscoreifolia)	Leatherleaf clematis
Coronilla varia L.	Crown vetch
Daucus carota L.	Wild carrot, Queen Anne's-lace
Dioscorea polystachya L.	Air-potato
Dipsacus fullonum L.	Fuller's teasle
Egeria densa Planch.	Brazilian elodea, Brazilian water-weed
Elaeagnus angustifolia L.	Russian olive
Elaeagnus umbellata Thunb.	Autumn olive
Euonymus alata (Thunb.) Sieb.	Burning bush
Euonymus fortunei (Turcz.) Hand. – Mazz	Winter creeper
Fatoua villosa (Thunb.) Nakai	Hairy crabweed
Festuca pratensis Huds.	Meadow fescue
Ficaria verna ssp. ficariiformis (F.W. Schultz) B. Walln. (=Ranunculus ficaria)	Lesser Celandine
Glechoma hederacea L.	Gill-over-the-ground, ground ivy
Hedera helix L.	English ivy
Humulus japonicus	Japanese Hops
Ipomoea quamoclit L.	Cypressvine morningglory
Kummerowia stipulacea (Maxim.)	Makino Korean clover
Kummerowia striata (Thunb.) Schindl	Japanese clover
Lamiastrum galeobdolon	Yellow Archangel
Lamium purpureum L.	Henbit
Lespedeza bicolor	Bicolor lespedeza
Lespedeza bicolor Turcz.	Bicolor lespedeza, shrubby bushclover
Lespedeza cuneata (Dum.-Cours.) G. Don	Sericea lespedeza
Ligustrum japonicum Thunb.	Japanese privet
Ligustrum sinense Lour.	Chinese privet
Ligustrum vulgare L.	Common privet
Liriope muscari (Dcne.) Bailey	Liriope, Lilyturf
Lonicera fragrantissima Lindl. & Paxton	Fragrant honeysuckle

DRAFT

Lonicera japonica Thunb.	Japanese honeysuckle
Lonicera maackii (Rupr.) Maxim.	Amur bush honeysuckle
Lonicera morrowii A. Gray	Morrow's bush honeysuckle
Lonicera standishii Jaques	Standish's Honeysuckle
Lonicera ×bella [morrowii × tatarica]	Hybrid Bush Honeysuckle
Lygodium japonicum (Thunb. ex Murr.) Sw.	Japanese climbing fern
Lysimachia nummularia L.	Moneywort, creeping Jenny
Lythrum salicaria L.	Purple loosestrife
Mahonia bealei (Fortune) Carriere	Leatherleaf Mahonia
Melilotus albus Medik.	White sweet clover
Melilotus officinalis (L.) Lam.	Yellow sweet clover
Microstegium vimineum (Trin.) A. Camus	Japanese stilt-grass
Miscanthus sinensis Andersson	Chinese silver grass
Morus alba L.	White mulberry
Murdannia keisak (Hassk.) Hand.-Mazz.	Asian spiderwort
Najas minor All.	Brittle naiad
Nandina domestica Thunb.	Nandina
Pastinaca sativa L.	Wild parsnip
Paulownia tomentosa (Thunb.) Sieb.&Zucc. ex Steud.	Princess tree
Perilla frutescens (L.) Britt.	Beefsteakplant
Persicaria longiseta (de Bruijn) Moldenke (Polygonum caespitosum Blume)	Oriental ladies-thumb
Persicaria maculata (Rafinesque) S.F. Gray (Polygonum persicaria L.)	Lady's thumb
Poncirus trifoliata (L.) Raf.	Hardy-Orange
Populus alba L.	White poplar
Phyllostachys spp.	Exotic bamboo
Pseudosasa japonica (Sieb. & Zucc. ex Steud.) Makino ex Nakai	Arrow bamboo
Pyrus calleryana Decne.	Bradford pear
Rhodotypos scandens (Thunb.)	Makino jetbead
Rubus phoenicolasius Maxim.	Wineberry
Senecio vulgaris L.	Ragwort
Setaria faberi R.A.W. Herrm.	Nodding foxtail-grass
Solanum viarum Dunal	Tropical soda apple
Sorghum halepense (L.) Pers.	Johnson grass
Spiraea japonica L.f.	Japanese spiraea
Stellaria media (L.) Vill.	Common chickweed
Triadica sebifera (L.) Small	Chinese tallowtree
Tussilago farfara L.	Coltsfoot
Veronica hederifolia L.	Ivyleaf speedwell
Vinca major L.	Bigleaf periwinkle
Vinca minor L.	Common periwinkle
Vicia sativa L.	Garden vetch
Wisteria floribunda (Willd.) DC	Japanese wisteria
Wisteria sinensis (Sims) DC	Chinese wisteria

DRAFT

Xanthium strumarium L.	Common cocklebur
Youngia japonica (L.) DC.	Oriental false hawksbeard

5) Trees

a) Trees shall be provided along the entire length and on both sides of all streets within the subdivision or land development;

b) Trees shall be spaced a maximum of fifty (50) feet on center for large trees, thirty-five (35) feet on center for medium trees and twenty (20) feet on center for small trees;

c) Tree plantings can be in uniform rows or in clusters or groupings;

d) Trees shall be classified as follows:

i. Large Trees: Ultimate height exceeding forty (40) feet and shall have a minimum of two and one half (2½) inch or larger caliper DBH at planting;

ii. Medium Trees: Ultimate height exceeding twenty-five (25) feet but not greater than forty (40) feet and shall have a minimum two (2) inch caliper DBH at planting; and

iii. Small Trees: Ultimate height not to exceed twenty-five (25) feet and shall have a minimum of one and one half (1½) inch caliper DBH at planting.

6) Shrubs

a) The minimum size for a shrub shall be twenty-four (24) inches in height at the time of planting;

b) The number of shrubs shall be determined by requiring one (1) shrub for every fifteen (15) feet of perimeter of the lot.

G. Off-Street Parking Landscaping

1) The following parking landscaping requirements are in addition to the planting requirements in this Article;

a) Perimeter Screening

i. All off-street parking lots shall be screened along the perimeter abutting a street, entrance drive, internal street or adjacent parking lot by a planting area that is a minimum ten (10) feet wide and located immediately adjacent to the parking area;

ii. The perimeter screening shall include one deciduous tree, planted thirty (30) feet on center, combined with a continuous row of deciduous shrubs, planted at a maximum of three (3) feet on center. Shrubs shall not exceed a height of forty-eight (48) inches at maturity;

DRAFT

iii. All perimeter screening vegetation shall be planted a minimum of three (3) feet from the edge of the parking lot pavement to protect the vegetation.

b) Interior Landscaping - The following requirements shall be met for new parking areas or expansion of existing parking areas containing more than four thousand (4,000) square feet or fifteen (15) parking spaces:

i. Planting Island – one (1) planting island shall be provided for each fifteen (15) parking spaces, at a minimum, and at the end of each parking row, unless an end cap island is required;

ii. The pervious surface area of each island shall be fifteen (15) feet long and a minimum of nine (9) feet wide;

iii. Where two (2) or more islands are required in a parking row, they shall be placed so that the islands are separated by no more than fifteen (15) spaces;

iv. All planting islands shall contain, at a minimum, one (1) deciduous tree per planting island. The tree trunk shall be trimmed bare of branches at least six (6) feet above grade at planting and maintained to allow for vehicular circulation and visibility beneath the canopy;

c) End Cap Planting Island - An end cap planting island shall be required at the end of each row of parking to separate the rows of parking and drive aisles:

i. The end cap planting island shall meet all the minimum requirements for planting islands; and

ii. The pervious area of each end cap island shall be a minimum of nine (9) feet wide and shall be fifteen (15) feet in length for each row of parking, measured along the length of the adjacent parking space.

d) Planting Median - A planting median shall be placed between every third (3rd) parking bay of adjacent parking bays, at a minimum, to prevent traffic movement across parking aisles:

i. The planting median shall be a minimum of nine (9) feet wide and may include an ADA-accessible sidewalk, where necessary, for pedestrian circulation;

ii. The planting median shall contain the following vegetation, at a minimum:

1) One (1) deciduous tree, planted thirty-five (35) feet on center, in a continuous or staggered row;

2) Ten (10) shrubs for each tree required, planted in rows or clustered groups; and

DRAFT

3) The planting median shall contain defined breaks, as necessary, to provide pedestrian circulation between bays of parking. The breaks shall allow for ADA accessibility from one side of the planting median to the other and onto the sidewalk within the planting median if a sidewalk is located within the median.

e) Groundcover - In addition to any other required plantings, all parking lot planting areas shall be planted with turf grass, ornamental grasses (not exceeding twenty-four (24) inches at maturity) or other groundcover materials. Mulch, stone or similar materials may be used sparingly;

f) Pervious Surface - A minimum of ten percent (10%) of a parking lot area shall be required to be pervious within the interior of the parking lot.

i) The previous surface calculation shall include all pervious area within planting islands, end cap islands and planting medians;

ii) To calculate the amount of required pervious surface area, the impervious surface area shall include all parking spaces and drive aisles that access parking spaces.

Figure 802. Off-Street Parking Diagram

DRAFT

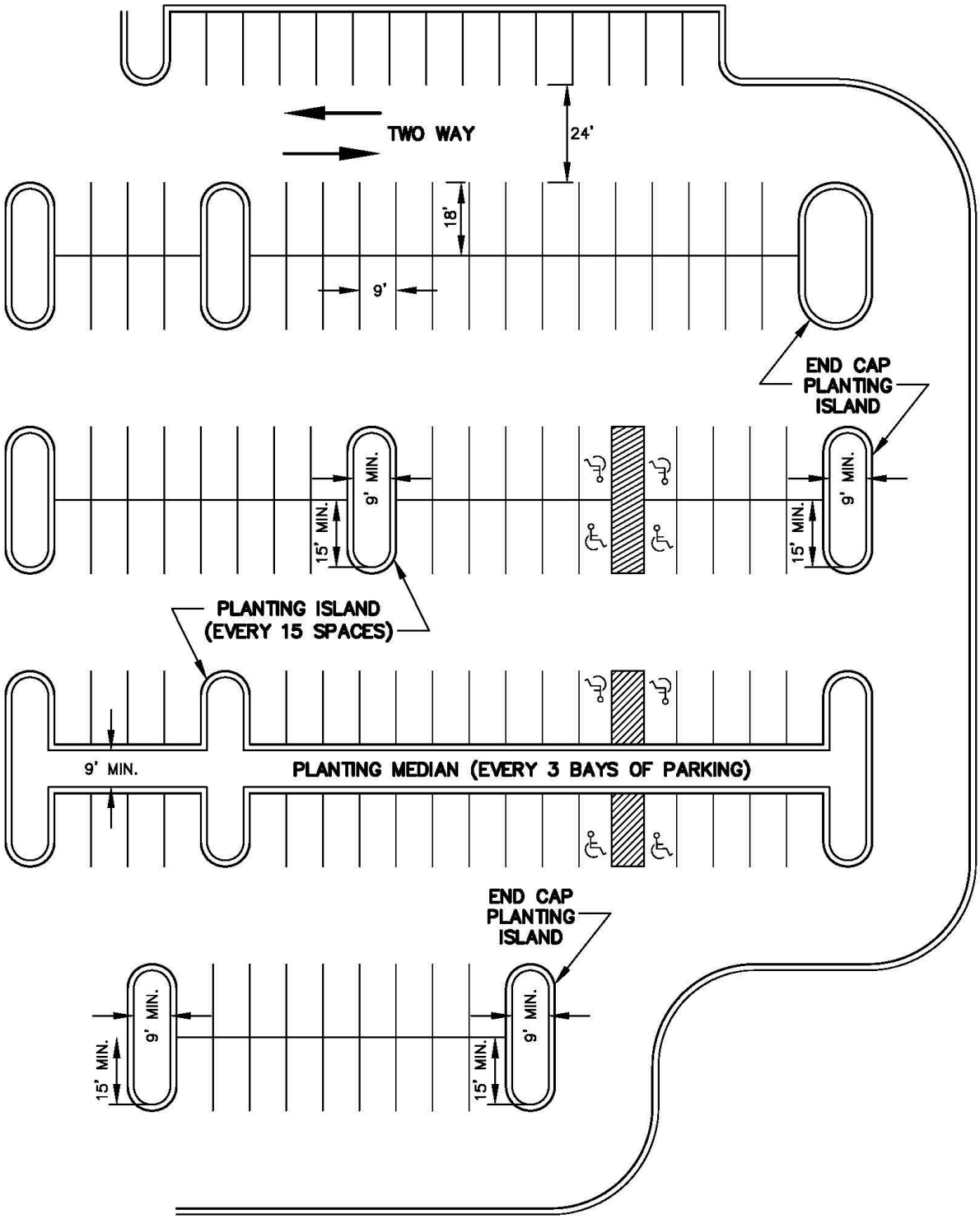
TWO WAY
24'
18'
9'
END CAP
PLANTING
ISLAND
9' MIN.
15' MIN.
PLANTING ISLAND
(EVERY 15 SPACES)
9' MIN.
PLANTING MEDIAN (EVERY 3 BAYS OF PARKING)
END CAP
PLANTING
ISLAND
9' MIN.
15' MIN.

H. Buffer yards

1) Purpose - The purpose of buffer yards is to screen and minimize the potential impact of new uses and development adjacent to existing developments or future developments. Additional landscaped areas, or buffer yards, shall be used to establish a greater separation where dissimilar land uses are located adjacent to each other;

2) When the width of a required buffer yard is in conflict with the minimum yard requirement of the Ordinance, the greater distance shall apply;

3) The buffer yard requirements are in addition to the planting requirements in this Article;

4) Standards - The type and extent of plantings or screening required for buffer yards shall be proportionally related to the degree of incompatibility or difference in use of the adjacent land uses, as defined below:

   a) Minor separation shall be required between single-family residential uses that are land developments. The minimum buffer yard in such instance shall be ten (10) feet;

   b) Moderate separation shall be required between single-family residential uses that are adjacent to multi-family residential uses. The minimum buffer yard in such instance shall be twenty (20) feet;

   c) Substantial separation shall be required between single-family residential or multi-family residential uses that are adjacent to schools, institutional uses, places of worship or recreational uses. The minimum buffer yard in such instance shall be thirty (30) feet;

   d) Major separation shall be required between single-family residential and multi-family residential uses that are adjacent to planned residential developments, planned non-residential developments, retail uses, office parks, hotels and manufacturing uses. The minimum buffer yard in such instance shall be fifty (50) feet.

5) Buffer Yard Types

   a) Buffer yard plantings or screens shall not be planted so as to encroach upon the street right-of-way;

   b) Buffer yard screens shall contain one (1) of the following plant materials option per every one-hundred (100) linear feet for a ten (10)-foot-wide minor separation buffer yard:

      i) (Option One) Five (5) large trees, two and one half (2½)-inch minimum caliper DBH or larger or seven (7) medium trees, two (2)-inch minimum caliper DBH;

      ii) (Option Two) Ten (10) small trees, one and one half (1½)-inch minimum caliper DBH;

DRAFT

iii) (Option Three) Fifty (50) shrubs, minimum twenty-four (24) inches in height and spread at the time of planting;

iv) (Option Four) Ten (10) evergreen trees, six (6) feet in height at time of planting; and

v) Alternative buffer yard planting options may be proposed so long as a mix of the above options and required quantities of plant materials are provided.

Table 804. Alternative Buffer Yard Planting Options WHERE DID THIS CHART COME FROM?? IT REPEATS THE REQUIREMNTS—NOT ALTERNATIVES

Options	Requirements
Option One	• (5) Large trees • 2½- inch minimum caliper DBH
Option Two	• 10 small trees • 1½ inch minimum caliper DBH
Option Three	• 50 shrubs, minimum 24 inches in height and spread at the time of planting.
Option Four	• Ten evergreen trees, 6 feet in height at the time of planting

c) As buffer yard widths increase, the plant materials required shall be increased by the following multiples:

i) Moderate Separation: the requirement in §811.H.5)b) times 1.25;

ii) Substantial Separation: the requirement in §811.H.5)b) times 1.50;

iii) Major Separation: the requirement in §811.H.5)b) times 2.00;

iv) Deciduous plant materials shall comprise no more than fifty percent (50%) of the required buffer yard plantings; and;

v) A minimum fifty percent (50%) of the buffer yard surface area shall be planted with new plantings or existing vegetation preserved on the site.

6) Existing Structures in Buffer Areas

a) In instances where an existing structure is located within any required Buffer Area, the Buffer Area may be reduced, provided the Buffer Area is not less than the minimum distance between the existing structure and the property line. This reduced Buffer Area width shall apply only to the side of the existing structure which encroaches on the required Buffer Area. The required Buffer Area shall apply on all other sides of the existing structure.

DRAFT

7) Existing Trees in Buffer Areas

a) Where trees already exist within the required Buffer Area, these trees shall remain undisturbed, except that diseased or dead material may be removed and may be counted toward the required number of trees for the required buffer if the trees are of adequate size species. If it is determined that some healthy trees must be removed in conjunction with development, a written request to remove such trees must be submitted to the Municipality, along with an explanation detailing the rationale for the request. These trees shall not be removed until the Municipality has given written authorization permitting said removal. This permission will not be unreasonably denied; however, those who violate this Section shall be subject to the maximum penalties authorized by this Chapter; and

b) When any trees, regardless of their physical condition, are removed, they shall be replaced by trees suitable to the environment. (See Appendix D for a suggested list of plant materials) All such replacement planting shall be in accordance with accepted conservation practices.

I. Screening

1) Location of screening - A continuous planting, hedge, fence or wall shall enclose any structure on all sides unless such structure shall be frequently moved, in which case screening on all but one (1) side shall be required. The average height of the screening shall be one (1) foot more than the height of the enclosed structure but shall not be required to exceed eight (8) feet in height. Whenever service structures are screened by plantings, such material may count towards the fulfillment of required landscaping;

2) Protection of screening material - Whenever screening material is place around any dumpster that is emptied or removed mechanically on a regular basis, a fixed barrier to contain the placement of the container shall be provided within the screening material on those sides where there is such material. The barrier shall be at least eighteen (18) inches from the material and shall be of sufficient strength to prevent possible damage to the screening when the container is moved. The minimum front opening of the screening material shall be twelve (12) feet to allow service vehicles access to the container.

3) All dumpster Enclosures are required to have a gate.

J. Vegetation Preservation

The specifications of this section and the provisions of the Municipalities Planning Code (MPC) govern vegetation preservation.

1) Vegetation Preservation - The removal of trees, shrubbery, foliage, grass or other natural growth shall be in accordance with the provisions of this Chapter and with any other Chapter of the Municipality of Monroeville Code of Ordinances regulating land development and logging. The activity of grubbing (defined as the clearing of underbrush and stumps from a well-treed area) shall be permitted with the express approval of the Zoning Officer. A landscaping plan shall be prepared and submitted at the time of subdivision and/or land

DRAFT

development application, bearing the seal of a landscape architect registered in the Commonwealth of Pennsylvania;

2) Cutting and clearing of vegetation, violations and penalties:

a) Forestry activities of timber harvesting and/or logging, whether by clear-cutting, selective cutting or other common practice, shall be permitted in any zoning district. All forestry activities shall comply with all applicable ordinances and the Municipality of Monroeville Timber Harvesting Ordinance No. 2653.

b) The cutting of trees and/or clearing of vegetation within forty (40) feet of the property line or the maximum buffer yard which could be applicable to the property as required by §806.H, whichever is greater, shall be prohibited. Grubbing activity, as defined in §806.J.1), shall be permitted where the purpose is to improve the appearance of the property;

c) "Imminent development" shall be considered to be development that is reasonably expected to commence for which a permit, as specified in the Subdivision Land Development Ordinance;

d) The penalty for violating this section shall be a maximum of five hundred dollars ($500.00) for each day in excess of sixty (60) days that the cleared property is not subject to development activities, unless the lack of development activities for a time in excess of sixty (60) days following the clearing of the property occurred for reasons other than a lack of reasonable expectations as to when the development would and could commence and/or a lack of realistic plans for the commencement of development. This language shall not be intended to prohibit the culling of diseased, dead or dying plants and trees, the development of flower or vegetable gardens or the removal of single trees or clumps of vegetation for aesthetic, safety or other concerns. It shall prohibit the mass or large-scale defoliation of potential buffer yards preparatory to development until shortly before the proposed development actually takes place;

e) In addition to any other remedy available to the Municipality and in the event the construction of structures and/or infrastructure on the site does not commence despite an approved land development plan within six (6) months of the completion of the clearing operations as determined by the Municipality, the disturbed area shall be reforested in accordance with the buffer yard designation in §806.H. Should this six (6)-month period fall during a season not conducive to planting, the Municipality may permit the developer, landowner and/or agents to delay this reforestation until a time more conducive, but shall commerce, in no case, any later than April 1st. Furthermore, at the time of subdivision and/or land development approval, the Municipality shall require a performance security be provided, in favor of the Municipality, to guarantee this reforestation, in an amount approved by the Municipal Engineer. The lot shall be reforested with a species comparable to the predominant species on the lot prior to the commencement of the clearing operations; and

DRAFT

f) The landscape plan required in §806.J1) shall show the location and species of all existing trees, twelve (12) inches in diameter at breast height DBH. All such trees shall be marked in the field so that they may be inspected by the Municipality. Applicants are encouraged to maximize the retention of all healthy existing trees six (6) inches or more DBH. Trees to be preserved shall not be disturbed within the drip line.

DRAFT

§812 Laundromat (Self Service Laundry)

A. A traffic impact study shall be required;

B. The site shall have frontage on and direct vehicular access to a public road;

C. All mechanical equipment shall be screened from the view of adjoining properties;

D. All waste collection/storage areas shall be located at least fifty (50) feet from the nearest building and shall be enclosed by a solid screen;

E. The minimum required building setback from any property adjoining a residential use or a residential zoning district shall be fifty (50) feet; and

F. The floor area of a Laundromat shall not exceed 3,000 sf.

§813 Medical Clinic

A. A traffic impact study shall be required;

B. The minimum site area required for a medical clinic shall be one acre;

C. The site shall be served by public water and public sewers;

D. Water pressure and volume shall be adequate for fire protection;

E. Ingress, egress, and internal traffic circulation shall be designed to ensure access by emergency vehicles;

F. The parking and circulation plan shall be referred to the Volunteer Fire Company for comments regarding traffic safety and emergency access;

G. A buffer yard shall be provided in accordance with the requirements of §806 of this chapter;

H. All mechanical equipment shall be screened from the view of adjoining properties;

I. All waste collection/storage areas shall be located at least fifty (50) feet from the nearest building and shall be enclosed by a solid masonry screen;

J. The appropriate departments and/or agencies of the Commonwealth of Pennsylvania, including, but not limited to the state Department of Health, shall license the facility and use. Said valid license and all appropriate documentation shall be submitted to the Municipality; and

K. A “Medical Clinic” is not a “Substance Abuse Treatment Facility.”

§814 Mobile, Modular, Industrialized or Manufactured Homes on Individual Lots

A. Mobile, modular or manufactured homes shall meet all requirements of this Chapter and other ordinances of the Municipality relative to single-family dwellings, including but not limited to minimum lot area and width, setbacks from lot lines, utility connections, off-street parking, and access to a public road;

DRAFT

B. Mobile, modular or manufactured homes shall be supported directly upon a peripheral masonry or concrete foundation wall (vinyl skirting is not permitted) in accordance with the Uniform Construction Code;

C. Mobile, modular or manufactured homes shall be securely anchored to the foundation by tie-downs which may be cast-in-place concrete, "dead men", eyelets imbedded in the footer or other device acceptable to the Municipal Building Official;

D. Mobile, modular or manufactured homes shall be placed on required foundations immediately upon arrival on the lot;

E. No mobile, modular or manufactured home shall be occupied until it has received an occupancy permit from the Building Inspector after connection to sewage disposal and water supply systems;

F. No mobile, modular or manufactured home shall be occupied unless its lot abuts a street, which has been improved to meet minimum Municipality standards and approved by all applicable governmental agencies; and

G. No mobile, modular or manufactured homes lacking toilet and washing facilities, cooking and food storage facilities, or any self-propelled vehicles or travel trailers designed for temporary occupancy shall be permitted for residential purposes for a period exceeding fourteen (14) days.

§815 Municipal Waste / Landfill

A. The landfill shall meet the definition of "Municipal Waste Landfill" as provided in Article Six of this Ordinance;

B. The landfill shall include provisions for post-closure use consistent with Appendix I: Use Table, District "LF" Landfill of the Monroeville Municipal Zoning Ordinance;

C. The total allowable additional topographic relief created by the landfill may not exceed 65% of the existing natural topographic relief for the proposed disposal area. The maximum allowable topographic relief at closure shall not exceed one-hundred (100) feet.

e.g.	*Existing low elevation*	*- 500*
	Existing high elevation	*- 600*
	Existing relief	*- 100*
	Allowable additional relief	*- 65*

The final slope contour at closure shall not exceed three (3) horizontal to one(1) vertical.

D. The landfill operator shall provide the plans as submitted to the applicable federal, state and county agencies, including anticipated construction, operation, closure, and end use milestones, within ninety (90) days of receiving requisite county, state and federal permits, therefor, and any amendments thereto. The landfill operator, by copying the Municipality on all regulatory correspondence to the regulatory bodies shall inform the Municipality of any substantial changes in such plans.

E. The landfill shall comply with Municipal Ordinances No. 2188 and Ordinance No. 2414, Making Unlawful the Causing or the Continuing of Unusually Loud Noise.

DRAFT

F. The operation of the landfill shall provide for minimal negative aesthetic impacts. The landfill shall also utilize an operating and staging sequence that provides a protective berm between landfill operations and the surrounding neighborhoods;

G. The landfill shall maintain compliance with all laws, regulations and/or ordinances of all relevant federal, state and local governments;

H. The landfill operator shall provide a document, certified by a Pennsylvania Registered Professional Engineer, which states that the facility has been designed to comply with Monroeville Ordinance 2700 (Stormwater Management), as amended. The document will also certify that the facility has been designed to adequately provide protection from erosion, sedimentation, slope in-stability and mine subsidence;

I. In the event of mine voids in the proximity of the landfill, the landfill operator shall monitor said voids for landfill gas and leachate that may escape the facility. The results of said monitoring shall be provided to the Municipality quarterly. The Applicant shall prepare a site specific monitoring program;

J. Mine subsidence and slope in-stability monitoring shall be performed by the landfill operator. The results of said monitoring shall be provided to the Municipality quarterly. The Applicant shall prepare a site specific monitoring program;

K. To the extent allowed by the Pennsylvania Department of Environmental Resources (PaDER), the landfill shall have sufficient final cover depth to accommodate vegetative species native to the landfill area, including woody plants and shallow rooting trees, on the closed landfill;

L. The landfill operator shall provide unobstructed access to Municipal Landfill Inspectors on a twenty-four (24) hour basis and such access shall include, but not be limited to, the ability to schedule any monitoring activity as defined in items (I) and (J) above or otherwise and said access shall also include access to office and telephone facilities;

M. The landfill operator shall implement a procedure for excluding the receipt of regulated hazardous waste as required by any applicable federal or state law. Records of inspections shall be made available to the Municipal Landfill Inspector;

N. The landfill operator shall immediately report any emergency to the Monroeville Municipal Manager and Director of Community Development. For the purposes of this Section, the term emergency includes a fire, spill or other environmental event that threatens public health and safety, public welfare or personal injury. An Emergency Response Plan shall be prepared and submitted to the Municipality and the Emergency Management Director;

O. The minimum size for a municipal solid waste landfill shall be one hundred (100) acres;

P. Any public roadway to the landfill shall be restricted for the use of said roadway by municipal waste vehicles between the hours of 11:00 P.M. and 7:00 A.M., which shall include the stacking of municipal waste vehicles on said public road;

Q. The landfill shall include buffer areas which shall conform to the following:

1) 300 feet from the applicant's property line;

DRAFT

2) The Applicant shall present a planting plan and schedule for the buffer area utilizing trees, shrubs and bushes. These materials shall be sufficiently large and planted in such a fashion that a year-round screen at least ten (10) feet in height shall be produced;

R. The landfill site shall be properly fenced along the interior boundary of the buffer zone to prevent blowing papers and other refuse on adjoining properties. The fence shall be metal wire mesh constructed of No. 9 gage wire woven in a 2" mesh in full conformance with the American Society of Testing Materials Specifications. The surface height of the fence shall be twelve (12) feet. The fence shall contain, at all entrances, gates which are locked except during business hours. In addition, temporary litter control fences shall be installed, in such a manner as to prevent litter from dispersing off of the landfill site. The landfill site shall be adequately policed, and the litter shall be collected daily and incorporated into the landfill;

S. The emission of unpleasant gases and odors shall not be permitted in such quantities as to be offensive outside the boundaries of the landfill site;

T. Sound pressure level of any operation within the landfill site shall not exceed, at any point along the landfill site boundary, the following decibel levels:

Between 7:00 A.M. and 7:00 P.M.	68 dBA
Between 7:00 P.M. and 7:00 A.M.	58 dBA

The Applicant shall provide a site specific sound monitoring program;

U. *SITE PLAN REVIEW FOR LANDFILLS:* No Zoning Permit or Zoning Occupancy Permit shall be issued for a landfill until a Site Development Plan has been submitted, reviewed and approved by the Municipality of Monroeville in accordance with the following provisions.

1) The application for approval of a proposed Site Development Plan shall be accompanied by a fee established by resolution of Council to cover the costs of review. The Zoning Officer shall set forth a reasonable time schedule to be followed prior to the presentation of the application to the Council.

2) The application shall consist of not less than twenty (20) copies of the letter of application together with not less than twenty (20) copies of the drawings submitted as part of the Site Development Plan. The Proposed Site Development Plan, a topographic plan, prepared by a professional engineer registered in the Commonwealth of Pennsylvania, to a scale no greater than 1 inch = 200 feet, on a standard sheet size of 24”H x 36”W, to include the following:

a) Title block giving name of development, property owner, developer, north point, key location map, registration stamp, date and scale on a standard sheet size of 24”H x 36”W*;*

b) Property lines, total acreage of parcel proposed for development and any existing landfill areas adjacent to the proposed landfill;

c) All existing streets, right of ways, and easements related to the development;

d) Owners of adjacent properties, including the location of any existing structures and driveway locations;

e) The location of relevant natural features on site, including, but not limited to, streams or other natural water courses and adjacent areas which are subject to flooding, and significant stands of existing trees;

f) The location of relevant natural features abutting properties within three hundred (300) feet including, but not limited to, streams or other natural water courses and adjacent areas which are subject to flooding, and significant stands of existing trees;

g) The location of existing structures and accessory uses on site;

h) The location of structures and utilities on abutting property within three hundred (300) feet of common property lines;

i) Landfill areas within the landfill site, including the staging of the proposed landfill development and the location of proposed access roads and proposed haul roads;

j) Cross Sections, at a true scale that is equal both horizontally and vertically, showing the existing grades and the proposed grades upon completion and closure of the proposed landfill;

k) Surface water runoff and sediment controls;

l) Location, dimensions, total square footage and ground floor elevations of proposed structures, walkways, driveways, entrances, parking areas, loading spaces, landscaping, signs, lighting facilities, fire hydrants and fire lanes, and other site improvements and amenities;

m) Location and approximate size of utilities to serve the proposed development;

n) Location of proposed equipment cleaning and tire cleaning areas;

o) Location of proposed weighing scales;

p) Location of proposed fire fighting equipment and other emergency and/or safety equipment;

q) Location of any proposed fencing;

r) Location of any proposed screening or buffer areas;

s) A Traffic Impact Study;

t) An Environmental Impact Statement, which shall include the following:

i. A description of existing conditions in the area;

ii. A land use history of the property;

iii. A description of the proposed landfill and associated facilities;

DRAFT

iv. An assessment of the proposed landfill on the natural environment, including summary descriptions, technical data, maps and diagrams, that specifically examines geology, topography, soils, slopes, hydrology, vegetation, wildlife and air quality;

v. A needs assessment showing how this proposed landfill complies with the Allegheny County Solid Waste Plan and justify the need for this additional landfill space;

vi. The relationship of the proposed landfill to the surrounding community, including the impact on land use plans, policies and controls;

vii. An inventory of private properties served by private water supplies within 3000 feet of the permit area;

viii. A historical record of previous landfill operations;

ix. A description of existing conditions, including if a landfill exists, the construction details of that existing landfill and the effects of that landfill on the proposed development;

x. A historical record of mining and quarrying in the area, both surface and deep mining operations;

xi. A chronological summary of methane gas and other gases in the area and methods for monitoring and controlling;

u) A description and schedule of the postclosure plan and future plans for the proposed landfill;

v) Site Plan Approval shall not be official until and unless the site plan as approved by Council and including all conditions of approval by Council is filed with the Zoning Officer within ninety (90) days of action by Council;

w) Site Plan Approval is not official until required approvals are received from county, state and federal agencies. All approved plans, any amendments and/or any substantial changes must be submitted to the Municipality within ninety (90) days from receiving permits from requisite county, state and federal agencies;

x) Site Plan Approval shall be valid for a period of one year following the applicant receiving permits from requisite county, state and federal agencies. If the proposed improvements are not under construction within one year of receiving requisite county, state and federal approvals, Council approval shall be void;

y) Once a year, during the anniversary month of Site Plan Approval, the Planning Commission will review site compliance and performance. Recommendations will be forwarded to Council as to whether the Zoning Permit should be extended for another year.

DRAFT

§816 Outdoor Dining Area, Accessory to the Principal Use

A. Municipal zoning approval shall be required for the construction of an outdoor dining area that is an accessory use within a commercial zoned property. The application for building and zoning permits shall indicate the location of the proposed outdoor dining area, subject to the following provisions:

1) Accessory Outdoor Dining Area is permitted where the pedestrian walkway is wide enough to adequately accommodate both the usual foot traffic in the area and the operation of the accessory outdoor dining activity. Accessory Outdoor Dining Area shall leave not less than four (4) consecutive feet of pedestrian pathway at every point, which is clear for unimpeded foot traffic. All fire hydrants, emergency exits, ADA and pedestrian ingress and egress areas shall remain unobstructed and compliant with existing accessibility laws;

2) No obstruction shall be placed within four (4) feet of the curb;

3) The outdoor dining area shall not exceed ten percent (10%) of the total gross floor area of the structure where the principal use is conducted, subject to a maximum of seven hundred twenty-one (721) square feet. Additional square footage for the outdoor dining area above seven hundred twenty-one (721) square feet shall require a variance from the Zoning Hearing Board;

4) There shall be no additional parking requirement for an outdoor dining area of seven hundred twenty-one (721) square feet or less. An outdoor dining area greater than ten percent (10%) of the total gross floor area of the structure where the principal use is conducted, or an outdoor dining area that exceeds seven hundred twenty-one (721) square feet, shall only be permitted if granted by variance from the Zoning Hearing Board and shall be subject to the off-street parking requirements of the Zoning Ordinance for the portion of the square footage of the outdoor dining area that exceeds ten percent (10%) of the total gross floor area of the structure where the principal use is conducted, or seven hundred twenty-one (721) square feet, whichever is applicable;

5) An outdoor dining area shall have a rope and stanchion as an enclosure unless some other barrier system is approved by the Municipality as an architectural design element;

6) An outdoor dining area shall be comprised of tables for dining. There shall be no standing room. No service equipment shall be permitted;

7) Furnishing for an outdoor dining area shall consist solely of moveable tables, chairs and decorative accessories. There shall be at least one (1) table that is ADA-compliant;

8) An outdoor dining area shall not be enclosed whether temporary or permanent;

9) The parking requirement for the outdoor dining area shall be calculated in the same manner as prescribed the underlying use, with the exception of number 4 above,

10) Restaurant management shall be responsible for operating and supervising the outdoor dining area;

DRAFT

11) The outdoor dining area shall not encroach into any required front, side and rear yards or other leaseholds, ownership interests, or business interests;

12) The Accessory Outdoor Dining Area shall not encroach within 100 feet measured from the closest point of building or service area, to a building of residential use;

13) The outdoor dining area shall not encroach into designated parking areas;

14) Within 100 feet measured from the closest point of building or service area to building of a residential use, service to The Accessory Outdoor Dining Area shall be opened no earlier than 7:00 a.m. and closed no later than11:00 p.m. prevailing local time;

15) The outdoor dining area shall be adjacent to the principal structure;

16) Outdoor entertainment shall be prohibited;

17) An outdoor dining area shall not be located nor impede within a designated fire lane nor shall be placed within four (4) feet of any emergency exit and fire hydrant;

18) Prior to serving food or beverages outdoors, the establishment shall obtain all necessary permits from all governmental and municipal agencies having jurisdiction including, but not limited to, the Allegheny County Health Department and the Pennsylvania Liquor Control Board;

19) The outdoor dining area shall be closed no later than 11:00 p.m. prevailing local time;

20) The outdoor dining area shall comply with regulations in the Municipal Noise Ordinance, as amended;

21) The outdoor dining area shall comply with Allegheny County Health Department regulations;

22) No signs shall be permitted in the outdoor dining area except a two (2)-foot by three (3)-foot identification or menu sign;

23) All refuse shall be located indoors;

24) Sanitary cleaning of the outdoor dining area before, during and after food service shall be required;

25) The use of retractable awning shall be maintained at least eight (8) feet above sidewalk level and shall not exceed fifteen (15) feet in height;

26) The use of removable umbrellas shall be maintained at least seven (7) feet above sidewalk level and shall not exceed fifteen (15) feet in height;

27) No umbrellas or awnings shall block the view of any required safety signage;

28) Lighting shall be incorporated into the façade of the building and shall

DRAFT

complement the style of the building. Lights on the building shall not be glaring to the pedestrians and shall illuminate only the outdoor dining area. General illumination shall be a minimum five (5) foot candles with a maximum of ten (10) foot candles;

29) Applicants shall provide information as required in the Subdivision and Land Development Ordinance, as amended;

30) Applicants shall provide information illustrating the intended location of the Accessory Outdoor Dining Area;

31) No outdoor dining area shall be established or operated without first obtaining an outdoor dining permit; subject to the licensing requirements in Chapter 256 of the Municipal Code, Mercantile (Business) Licenses, as amended. Said license shall not be transferrable upon assignment or sale of said business. Applications are available through the Community Development Department.

32) The width of the outside dining area cannot exceed the width of the Restaurant's façade; Restaurants located on a corner may offer sidewalk food service at the corner and along the second sidewalk for a distance equal to the interior depth of the Restaurant;

33) Outside cooking and food preparation is not permitted; and

34) No music or other audio performance may be broadcast in the sidewalk seating area or performed in the sidewalk seating area;

§817 Outdoor Storage

A. Except for nurseries, garden supply, building supply and similar business, which customarily require outside storage of materials, storage and display of materials outside a completely enclosed structure shall not be permitted. In the case of nurseries, garden supply, building supply and similar businesses, outside display and storage areas shall be completely enclosed by a security fence and shall be screened by an opaque fence or hedge, which is at least six (6) feet in height. All other commercial activities shall take place within a completed enclosed building;

B. Outdoor Storage, shall be authorized only in non-residential districts;

C. Outdoor Storage surface area shall be a dust-free, all-weather surface, such as asphalt, concrete or compacted gravel;

D. Outdoor Storage shall not be allowed in the Front Yard;

E. Outdoor Storage shall not occupy more than ten percent (10%) of the entire Lot Area;

F. All Outdoor Storage shall be screened to ensure the area is not visible from the Public Right-of-Way or adjacent residential districts;

G. Screening shall be of sufficient height and density to screen storage from major highways, passenger rail-lines and other Public access ways;

H. All mechanical equipment shall be screened from the view of adjoining properties;

DRAFT

I. All waste collection/storage areas shall be located at least fifty (50) feet from the nearest building and shall be enclosed by a solid masonry screen;

J. All screening shall be maintained in such a manner as to present a neat and orderly appearance at all times;

K. Outside storage shall not encroach upon the required parking or off street loading berth areas;

L. Temporary outdoor storage of merchandise of a seasonal nature will be permitted by special permit if:

1) The outdoor storage of merchandise shall not be visible from an adjacent residentially zoned lot;

2) The outdoor storage of merchandise shall not continue for more than thirty (30) days; and

3) No more than four (4) permits shall be issued during a calendar year to any one (1) business;

M. The permanent outdoor storage of merchandise is prohibited and all operations of a business shall take place within a closed building, unless otherwise specified. Merchandise shall mean merchandise normally stocked for that business and replenished from new stock on a regular basis;

N. Vehicles - Company vehicles operated daily in connection with a business may be parked on the premises after business hours. Fleets of company vehicles (three (3) or more) operated daily in connection with a business cannot be parked on the premises after business hours if they exceed the size of a pickup truck or panel van. All other vehicles, except licensed school buses, shall remain on the premises only long enough to load, unload, or perform other functions incidental to the conduct of business;

O. Shopping cart storage - Any establishment, which furnishes carts or mobile baskets as an adjunct to shopping, shall provide definite areas within the paved areas for storage of said carts. Each designed storage area shall be clearly marked for storage of shopping carts. Shopping carts shall be collected regularly and not create a safety hazard;

1) Shopping cart storage and stationary or mobile collection units shall not conflict or encroach within the required parking areas, fire lanes, access aisles, sidewalks and/or loading berth.

P. Outdoor Displays - Outdoor displays shall be allowed in the non-residential districts subject to the following:

1) Outdoor displays shall be allowed adjacent to a Principal Building wall and extending to a distance no greater than five (5) feet from the wall;

2) Such displays shall not be permitted to block windows, entrances or exits, and shall not impair the ability of pedestrians to use the Building; and

3) Outdoor displays shall be temporary or seasonal in nature.

DRAFT

§818 Performance Standards

During the review of an application for Planning Commission review and Council approval, the applicant may be required to submit data and evidence documenting that the proposed activity, facility or use will comply with the provisions of the following Performance Standards. In reviewing such documentation, the Municipality may seek the assistance of any public agency having jurisdiction or interest in the particular issues and the Municipality may seek advice from a qualified technical expert. All costs of the experts review and report shall be paid by the applicant. A negative report by the technical expert and the applicant's refusal or inability to make alterations to ensure compliance with the following Performance Standards shall be a basis for denying approval of the application:

A. Air Quality/Emissions

1) No pollution of air by fly ash, dust, smoke, vapors or other substance shall be permitted which is harmful to health, animals, vegetation or other property or which can cause soiling of property (i.e. a Rock Crusher producing dust that crosses a property line);

2) Any land use or activity that is a source of the emissions of smoke, particulate matter or other air pollutants shall comply with all appropriate governmental standards and regulations governing air quality and emissions. Any such land use or other activity shall obtain and maintain all necessary licenses and permits from all appropriate governmental agencies, regulations and laws.

B. Electrical Disturbances

1) No activity shall cause any electrical disturbance adversely affecting radio or other equipment in the vicinity. The owner/operator shall comply with all governmental agencies, regulations and laws;

2) All activity must comply with the most recent National Environmental Policy Act (NEPA-Colo Report), National Historic Preservation Act and all appropriate governmental agencies, regulations and laws.

C. Erosion

1) No erosion that will carry objectionable substances onto neighboring properties shall be permitted.

D. Fire Protection

1) Any use or development shall comply with all governmental agencies, regulations and laws.

E. Hazardous Materials

1) Any land use or activity that involves the use of toxic, hazardous, or radioactive materials shall comply with all appropriate governmental agency regulations governing the use, storage, transportation, emission, and disposal of such materials. Any land use or other activity shall also obtain and maintain all necessary licenses from the appropriate governmental agencies.

F. Lighting and Glare

DRAFT

The following lighting requirements are provided to ensure coordinated, safe and functional lighting systems in all zoning districts. The site lighting requirements include:

1) All parking areas, driveways and loading areas, entryways and pedestrian paths shall be provided with a lighting system that shall furnish an average minimum 0.5 foot candles within such areas during hours of operation;

2) The height of a luminary shall be limited as follows:

    a) In any residential district, the maximum height permitted shall be twenty (20) feet;

    b) In any other district, the maximum height shall be twenty-five (25) feet, except where otherwise specified;

    c) Ball diamonds, playing fields and tennis courts having a unique requirement for nighttime visibility may be exempted from Subsections a and b if, in the judgment of the Municipal Council, their limited hours of operation and the location of the luminaries will adequately protect neighboring residential uses; and

    d) The Municipal Council may further limit the height of luminaries when it is determined that proposed lighting may have a detrimental impact upon nearby properties.

e) Pedestrian areas, plazas and walk lights shall not exceed fifteen (15) feet in height and should be designed to be harmonious with light fixtures on site;

f) All pedestrian areas, plazas and walks with steps or change of grade shall be suitably lighted at all times. Details of proposed lighting fixtures and supports and the locations thereof shall be submitted as required by this chapter;

g) The light intensity at any lot line shall not exceed 0.5-foot candles. Where light is reflected in a street area, the intensity measurement shall be made on the right-of-way line from where the light emanates and shall not exceed 0.5 foot candles at such point of measurement;

h) No Use shall produce a strong light or reflection of a strong light or glare that is visible from any point along a Lot Line;

i) Feature lighting, such as uplighting of trees or other plant material, seasonal lighting, etc., shall be so arranged to reflect away from any residential Structure;

j) Security lighting fixtures shall not project above the facade or roofline of any Building and shall be shielded. Security lighting fixtures shall not be substituted for Parking Lot or walkway lighting fixtures and are restricted to lighting only loading and storage locations or other similar areas requiring security lighting;

k) For all non-residential Uses, service-area lighting shall be contained within the service yard boundary. No light spillover shall occur outside the service area;

DRAFT

l) Spotlights or other types of artificial lighting that provide a concentrated beam of light shall be directed so that the beam of light does not extend beyond any property lines;

m) No artificial lighting shall shine directly upon any neighborhood property or be so established that it shall shine directly upon any neighboring property or shall shine directly on or into any room or rooms, porches or patios of any neighboring property;

n) When practical, overhead wiring shall be avoided;

o) All lighting shall be appropriately shielded from traffic or any public right-of-way and from any residential zoning district;

p) Lighting devices that produce direct or reflective glare on adjoining properties or thoroughfares shall not be permitted; and

q) Photometric contour plans shall be provided to assure compliance with the requirements of this section.

G. Odors

1) For purposes of this subsection, the "odor threshold" is defined as the minimum concentration in air of a gas, vapor, or particulate matter that can be detected by the olfactory systems of a panel of healthy observers. Continuous, frequent, or repetitive odors detectable after the odorous air has been diluted with five or more volumes of odor-free air shall be a violation of these standards.

2) No odors or malodors that are discernible on any adjoining lot or property shall be permitted.

3) No use other than agricultural in any zone may generate any odor that reaches the odor threshold, measured at:

a) The outside boundary of the immediate space occupied by the enterprise generating the odor;

b) The lot line if the enterprise generating the odor is the only enterprise located on the lot;

c) Exceptions:

i. An odor detected for less than 15 minutes per day is exempt; and

ii. No violation shall occur if the person or business causing or allowing the emission of odorous air contaminants is employing the best available treatment, maintenance, and control currently available to maintain the lowest possible emission of odorous gases.

H. Vibrations

1) Vibrations that exceed the standards of all appropriate governmental regulatory agencies shall be prohibited.

DRAFT

2) Vibrations resulting from temporary construction activity that occurs between 7:00 a.m. and 7:00 p.m. shall be exempt from the requirements of this subsection.
3) No use in any permissible business zone may generate any ground-transmitted vibration that is perceptible to the human sense of touch measured at the outside boundary of the immediate space occupied by the enterprise generating the vibration if the enterprise is one of several located on a lot or the lot line if the enterprise is one of several located on a lot or the lot if the enterprise generating the vibration is the only enterprise located on the lot;

I. Water Pollution

1) Water quality shall be subject to the standards established by all appropriate governmental agencies.

§819 Portable Outdoor Storage (Shipping Containers)

A. It shall be unlawful for any person to place, cause or otherwise allow a portable storage unit or dumpster to be placed upon a property, street, sidewalk or driveway within the Municipality without first filing an application with the Municipality, and obtaining a permit from the Municipal Planning and Zoning Department. A permit fee (in an amount to be established from time to time by resolution of the Municipality of Monroeville Council) shall accompany the application. The duration of such permit shall be stated thereon, and the continued validity of such permit shall be contingent upon full compliance with the regulations set forth in this Ordinance;

B. An application for a permit to temporarily place a portable storage unit or dumpster shall be filed by the property owner where such portable storage unit or dumpster is to be placed on or adjacent thereto;

C. All permits issued shall cover only the property set forth in the permit application; however, in the event that it is necessary to replace a portable storage unit or dumpster unit that has been placed upon a property, driveway or street prior to completion of said work, additional permits shall not be required;

D. There shall be no more than one (1) portable storage unit or dumpster per lot;

E. A portable storage unit shall be no larger than eight (8) feet wide, sixteen (16) feet long and eight (8) feet high;

F. No portable storage unit or dumpster shall remain on a lot in a residential zoning district in excess of thirty (30) days in any calendar year. The portable storage unit or dumpster shall be removed from the lot by the expiration date on the permit. In no event shall a permit be issued for consecutive periods as applicable;

G. No portable storage unit or dumpster shall remain on a lot in a non-residential zoning district in excess of sixty (60) days in any calendar year. The portable storage unit or dumpster shall be removed from the lot by the expiration date on the permit. In no event shall a permit be issued for consecutive periods as applicable;

H. A portable storage unit or dumpster shall be permitted during construction, reconstruction, alteration or renovation of the principal building for an additional period of three (3) days before and after such activity, provided that all applicable permits have been issued by the Municipality. The portable storage unit or dumpster shall be

DRAFT

removed from the lot before the Building Inspector issues an occupancy permit, or if the construction activity ceases for a period of more than thirty (30) consecutive days;

I. A portable storage unit or dumpster may be located on a lot during an emergency as declared by the appropriate federal, state, county or municipal agencies. The portable storage unit or dumpster shall be removed from the lot within seven (7) days after the end of the emergency declaration;

J. All portable storage units or dumpsters shall be on the lot for which the applicable permits have been issued and the activity is being performed;

K. The placement of a portable storage unit or dumpster must be temporary in nature and must be one that can be readily removed;

L. Where possible, the portable storage unit or dumpster shall be placed on a paved surface to the rear or side of the principal structure;

M. When placed on the driveway or paved area in the side or rear yard, portable storage unit or dumpster shall be placed at least ten feet from any property line, space permitting;

N. A portable storage unit or dumpster shall bear the name and telephone number of the company;

O. No street shall be closed for the placement or utilization of a portable storage unit or dumpster;

P. No portable storage unit or dumpster may be placed on any Arterial or Collector roads in the Municipality, or within any prohibited or restricted areas;

Q. Each of the portable storage unit or dumpster rollers, wheels or feet must be placed upon a wooden pad of at least twelve inches by twelve inches and at least ¾ of an inch in thickness, or on a similar protective device to prevent damage to the road surface. If any damage or injury to the cartway, curb or sidewalk shall be caused or done by the use or occupancy of any street or road hereunder, the party to whom such permit shall have been issued shall be responsible and liable for the same and shall restore the cartway, curb and/or sidewalk to its original condition within fourteen (14) days of notice from the Municipality. If the permittee refuses to properly restore the cartway, curb and/or sidewalk to its original condition, the Municipality may do so and collect the cost of the same from the permittee;

R. The Zoning Officer shall not permit a portable storage unit or dumpster to be placed on a Municipal street. The Municipal Police may permit placement of a portable storage unit or dumpster if the following is determined:

1) A portable storage unit or dumpster placed upon a street shall not be placed within 40 feet of an intersection or within 15 feet of a STOP sign;

2) A portable storage unit or dumpster shall not be placed within 15 feet of a fire hydrant;

3) A portable storage unit or dumpster shall not be placed within 10 feet of a driveway or opposite a driveway;

DRAFT

4) A portable storage unit or dumpster shall not be placed on the side of any street that is posted "No parking this side of street;"

5) A portable storage unit or dumpster placed upon a street shall bear reflective markings in sufficient positions and with sufficient reflective capacity to provide reasonable warning to approaching nighttime traffic of its location;

6) Placement of the portable storage unit or dumpster on the street abutting the property or on the property's driveway will not create a safety hazard to or endanger the free flow of pedestrians or vehicles.

S. There shall be no advertising on the portable storage unit or dumpster with the exception of the name and phone number of the unit's supplier, which is required;

T. Sanitation. The following requirements shall be maintained while a portable storage unit or dumpster is on or at the site:

1) The area around the portable storage unit or dumpster shall be kept free of debris and litter;

2) Any dumpster into which animal or vegetable waste or material has been dumped or deposited shall be removed or emptied within twenty-four (24) hours;

3) Any dumpster producing or causing noxious, foul or offensive odors shall be immediately removed or cleaned to eliminate the odor; and

4) A full dumpster shall be removed from the property within two (2) days.

U. Application for a permit shall be made to the Municipality of Monroeville Zoning Officer on a form provided by Municipality of Monroeville. The Zoning Officer shall determine the most appropriate location for the portable storage unit or dumpster to be placed on the lot. A permit fee (in an amount to be established from time to time by resolution of the Municipality of Monroeville Council) shall accompany the application. The issuances of a permit shall allow the applicant to place the portable storage unit or dumpster on the subject lot in the location specified in the permit in conformance with the requirements of this Ordinance. The permit shall be posted in plain view on the subject lot;

V. VIOLATIONS AND ABATEMENT

1) Any portable storage unit or dumpster not in compliance with this ordinance is hereby declared to be a public nuisance and may be abated by the Municipality at the owner's or responsible person's expense. Abatement shall, at the Municipality's option, include the removal and/or the emptying of the dumpster and/or portable storage unit as the case may be;

2) Violation of any provision of this chapter shall be punishable by a fine in an amount of not more than five hundred dollars ($500) plus fifty dollars ($50) per day the violation continues; and

3) A person found guilty of a violation of this chapter shall be ordered to abate the problem and pay the costs incurred by the Municipality if the Municipality abated the problem.

§820 Recreational Vehicles and Motorized Recreational Equipment

DRAFT

Recreational vehicles and motorized recreational equipment, including but not limited to: recreational vehicles; campers; trailers; motor homes; all-terrain vehicles; quads; boats, boat trailers and watercraft; snowmobiles; and motorcycles shall be subject to the following requirements:

A. No recreational vehicle shall be erected, used, or maintained for living or residential purposes in the Municipality;

B. Recreational vehicles shall be parked or stored in a garage or rear yard. When parked in the rear yard, the recreational vehicle must be fully screened from adjacent residential properties using a privacy fence or evergreen vegetation; and

C. Recreational vehicles shall not be stored or parked on a public street or in the front or side yard of a lot.

§821 School

A. A traffic impact study shall be required;

B. The school shall have access directly to a public road;

C. Buildings on the lot shall be set back at least forty (40) feet from all property lines and shall be no higher than thirty-five (35) feet;

D. Recreational areas shall be located no closer than thirty (30) feet to an abutting street or thirty (30) feet from other property lines;

E. The school's course of instruction or other activities on the lot shall not create noise, dirt, glare, dust or other nuisances onto adjacent properties;

F. Ingress, egress, and internal traffic circulation shall be designed to minimize congestion during peak usage of the facility;

G. Safe vehicular access and areas for discharging and picking up children shall be provided in the following manner:

1) Minimum dimensions of discharge and pick-up areas shall measure ten (10) feet in width and fifty (50) feet in length;

2) Discharge and pick-up areas shall be so located and designed so that the vehicles intended to use them can maneuver safely and conveniently to and from a public right-of-way and complete the discharge and pick-up without obstructing or interfering with the use of any public right-of-way, any parking space, or parking lot aisle; and

3) No area allocated as a discharge and pick-up area may be used to satisfy the area requirements for off-street parking, nor shall any portion of any off-street parking area be used to satisfy the area requirements for discharge and pick-up areas. All off-street discharge and pick-up areas shall be separated from walkways, sidewalks, parking lot aisles, streets, and alleys by curbing or other protective devices as approved by the Municipality;

DRAFT

H. Outdoor play areas must meet all applicable accessibility requirements of the Americans with Disabilities Act.

§822 Solar Energy Facility, Accessory to the Principal Use -- Also see:Solar Energy Facility (Solar Photovoltaic Systems), Principal Use in Article V – Conditional Use

A. Municipal zoning approval shall be required for the construction of any solar energy facility that is an accessory use on any site or lot. The application for building and zoning permits shall indicate the location of the proposed solar energy facility, including the percentage of roof coverage, if the facility is mounted on a building;

B. The applicant shall demonstrate through project planning and proposed mitigation that a proposed facility's impacts will be minimized for surrounding properties and the community. This may include, but not be limited to, information regarding site selection, facility design or appearance, buffer yards, and screening of ground mounted electrical and control equipment;

C. Where the installation of the facility constitutes a land development, the applicant shall apply for, and receive land development approval pursuant to the Subdivision and Land Development Ordinance;

D. Construction of any solar energy facility shall comply with all applicable rules, laws and regulations of the United States Federal Aviation Administration. Documentation of compliance shall be provided to the Municipality;

E. To the extent applicable, all solar energy facilities shall comply with the state Uniform Construction Code and the regulations adopted by the state Department of Labor and Industry;

F. All electrical components of solar energy facilities shall conform to relevant and applicable local, state and national codes, and relevant and applicable international standards;

G. Solar energy facilities shall not be artificially lighted, except to the extent required by the Federal Aviation Administration or other applicable authority that regulates air safety;

H. Solar energy facilities shall not display advertising, except for reasonable identification of the facility manufacturer;

I. Transmission and power lines shall be placed underground or out of sight;

J. All solar energy facilities shall not exceed a maximum height of fifteen (15) feet measured from grade, except when the solar energy facility is located on the roof of the principal structure wherein said solar energy facility shall not exceed ten (10) feet from the of the roof;

K. All solar energy facilities shall not exceed thirty percent (30%) of the rear yard area;

L. Solar energy facilities shall only be located in the rear yard or roof of the principal structure. Where no such setback is specified, the solar energy facility shall be no closer than ten (10) feet from all property lines; and

M. No solar energy facility shall be attached to a tree or any other natural object or structure

DRAFT

not intended to support such a solar energy facility.

§823 Swimming Pools Accessory to the Principal Use

A. The swimming pool is intended and used solely for the enjoyment of the occupants of the principal use of the property on which it is located;

B. The swimming pool shall meet regulations of all applicable governmental agencies, including, but not limited to, International Property Maintenance Code, the Allegheny County Health Department; and

C. The swimming pool, including any deck areas or ancillary structures, shall meet all yard and setback requirements. Swimming pools shall be located in the rear yard of a zoning lot only and shall be setback at least ten (10) feet from the side and rear lot lines.

§824 Temporary Memorial Displays NEED TO ADD TO TABLE OF CONTENTS

A. In the event of the death of an individual on or near a public road, for a period of two (2) weeks following such death, the Municipal Manager may permit a temporary memorial display. The display must not interfere with vehicular traffic within the public right of way;

B. No part of the display shall be within the cartway or roadway or any driveway, shall be at least five (5) feet from the edge of the cartway and shall not block any sidewalk;

C. Such display may not be composed of materials that are subject to blowing on to the public roadway or private property;

D. Such display may not rise over two (2) feet in height;

E. Such display may not contain any electronic lighting;

F. The Municipal Manager may remove part or all of components of a temporary memorial display that in the opinion of the Municipal Manager do not meet all of the conditions noted in this section;

G. The Municipal Manager may require a temporary memorial display be moved to a different location determined by the Municipal Manager in the Municipal Manager's sole discretion for the purpose of public convenience or safety; and

H. Any temporary memorial display shall be removed within two (2) weeks following the death of the individual memorialized. If the temporary memorial display is not removed, the Municipal Manager shall arrange for the removal of the temporary memorial display and disposition of its contents as the Manager may determine appropriate.

~ END OF SECTION ~

THIS PAGE INTENTIONALLY LEFT BLANK

DRAFT

§901 General Requirements
§902 Parking Lot Design Requirements
§903 Parking Garage Design Standards—review the standards in this section
§904 Minimum Parking Requirements
§905 Parking Demand Analysis
§906 ADA Accessible Parking Requirements
§907 Off-Street Loading Berth

§901 General Requirements

A. All buildings and structures erected and all uses of land after adoption of this Ordinance shall be provided with off-street parking as set forth in this Article;

B. The provisions of this Article shall not apply to any existing structure or building, except where there is a change of use or otherwise prescribed in this Article;

C. Whenever a building or structure constructed before the effective date of this Ordinance is changed or enlarged in floor area, number of employees, number of housing units, seating or otherwise to create a need for an increase in the number of parking spaces, additional parking spaces shall be provided on the basis of the enlargement or change;

D. Off-street parking facilities in existence on the effective date of this Ordinance and located on the same lot as the building or use served shall not hereafter be reduced below the requirements for a similar new building or use under the provisions of this Article;

E. The following regulations shall govern the location of off-street parking spaces and areas:

1) Parking spaces for all detached residential uses shall be located on the same lot as the use which they are intended to serve. Each required off-street parking space shall have direct access to a public road;

2) Parking spaces for apartments and other multi-family developments shall be located not more than three hundred (300) feet from the principal use;

3) No parking space shall be located in any manner on a public street right-of-way, except where specifically authorized;

4) No required yard in any district shall be used for parking vehicles except for a driveway. In single-family developments, not more than twenty-five percent (25%) of the front yard shall be devoted to driveway access. In single-family attached developments, not more than fifty percent (50%) of the front yard shall be devoted to driveway access. In multiple-family developments, not more than fifty percent (50%) shall be devoted to driveway access. In non-residential developments, driveway access shall be permitted in accordance with requirements in the Subdivision and Land Development Ordinance.

F. Each parking space in a parking lot shall have a minimum dimension of no less than nine (9) feet in width and eighteen (18) feet in length, exclusive of driveways, aisles and other circulation areas;

DRAFT

G. Parking perpendicular to the grade shall be permitted up to a grade of five percent (5%); parking parallel to the grade shall be permitted up to a grade of seven percent (7%); no parking shall be permitted on grade in excess of seven percent (7%);

H. ?? 308.3 6" Curbing on perimeter??

I. All parking spaces shall meet the minimum specifications in Table 901:

Table 901 Minimum Off-Street Parking Space Specifications

Parking Angle (Degrees)		**90**	**60**	**45**	**30**	**Parallel**
Stall Width (Feet)		9	9	9	9	8
Stall Length (Feet)		18	20	19	18	24
Aisle Width	One-Way (Feet)	22	18	12	12	12
	Two-Way (Feet)	24	24	24	24	24

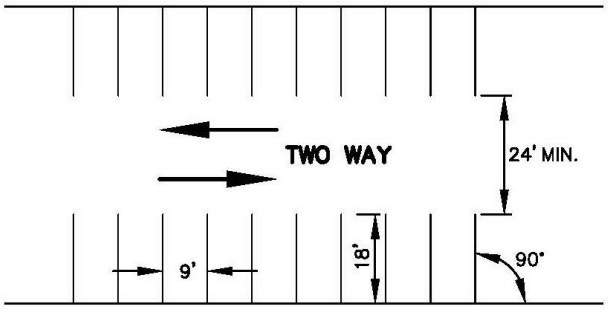

90° PARKING

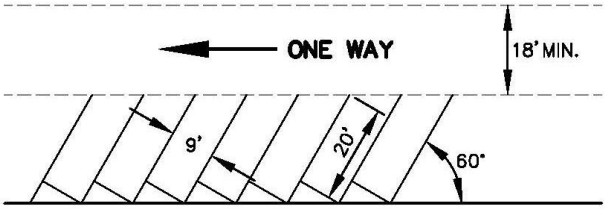

60° PARKING

DRAFT

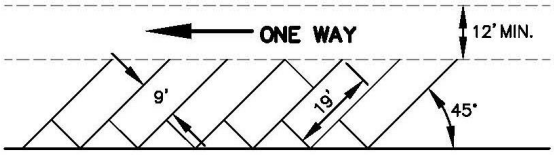

45° PARKING

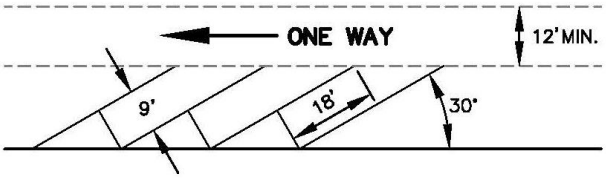

30° PARKING

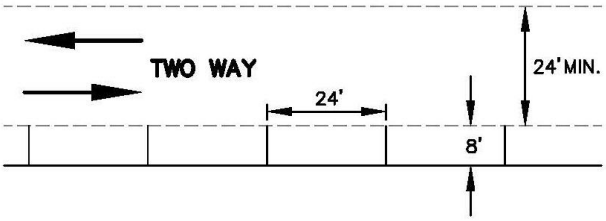

PARALLEL PARKING

J. Alternate Parking: Council may require or approve alternate design standards for off-street parking in response to unusual conditions such as dead car storage, attendant parking, indoor parking, interaction between different abutting uses in the same zoning district, or a clearly documented difference between expected parking load and required parking spaces; provided any reduction in the number of required spaces so granted shall be offset by a reserved area for future installation of a like number of spaces to be so improved at the discretion of the Municipality

K. Shared Parking: Shared Parking is encouraged to promote efficient use of land and resources by allowing users to share off-street Parking Facilities for Uses that are located near one another and that have different peak parking demands or different operating hours. The required off-street parking spaces for any number of separate buildings, structures or uses may be provided collectively on one (1) lot, provided that the total number of such spaces shall not be less than the sum of the requirements for the various individual buildings, structures or uses computed separately in accordance with this Article;

1) Location: Shared off-street parking spaces shall be located no further than one thousand (1,000) feet from the buildings and uses they are intended to serve;

2) Zoning Classification: Shared parking areas shall be considered accessory uses of primary uses that the parking spaces are intended to serve. Shared parking

areas shall comply with the requirements of the zoning classification of the most intensive of the uses shared by the shared parking area;

3) Required Study and Analysis: The applicant shall submit a shared parking analysis to the Zoning Hearing Board which clearly demonstrates the feasibility of shared parking. The study shall be provided in a form established by the Municipality and made available to the public. It shall address, at a minimum, the size and type of the proposed development, the composition of tenants, the anticipated rate of parking turnover and the anticipated peak parking and traffic loads for all uses that will be sharing off-street parking spaces;

4) Shared Parking Agreement: A shared parking plan shall be enforced through written agreement among the owners of record. An attested copy of the agreement shall be submitted to the County recorder's office for recordation on forms made available by the Municipality. Proof of recordation of the agreement shall be presented to the Municipality prior to issuance of a building and/or occupancy permit:

a) A shared parking plan shall require a written shared parking agreement, acceptable to Council, which shall include an agreement by the Owner(s) of record of the Parking Area and of the Applicant. The agreement shall be submitted to Council prior to issuance of a Permit;

b) A shared parking agreement shall be revocable by the parties to the agreement only if the off-street parking requirement is satisfied;

c) The agreement shall specify that the shared spaces are not leased for a Use that operates during the same time frame and would create a conflict; and

d) The agreement shall specify the time frame, number and location of spaces to be shared.

L. When the determination of parking spaces required for a use results in a fraction of a space, any fraction shall be counted as one (1) space;

M. Off-street parking spaces shall be located on the same zoning lot as the principal use, or on an adjacent lot in the same zoning district, except that spaces for churches and public places of assembly may be located on a different lot within 400 feet of the principal use after site plan approval;

N. When two (2) or more uses are located within the same building or structure, off-street parking spaces equal in number to the sum of the square footage of the gross floor area of the separate uses shall be provided;

O. All off-street parking requirements required by this Article shall be used only for the parking of vehicles of occupants, patrons, visitors or employees and shall not be used for any kind of loading, sales, service or continuous storage of a vehicle for more than forty-eight (48) hours; and

P. Temporary structures and trailers used in conjunction with construction work may be permitted only during the period that the construction work is in progress. Permits for other temporary structures may be issued for sixty (60) day periods, but such permits shall not be renewed except as a special exception when approved by the Board.

DRAFT

§902 Parking Lot Design Requirements

****Also Refer to Section 806.G for Parking Island Requirements****

A. Sidewalks shall be provided with all parking lots to provide safe access between buildings, parking stalls, adjacent properties and along streets (Also refer to "Sidewalks" in Ordinance 2525 (SALDO) for additional design requirements;

B. Safe vehicular access and areas for discharging and picking up people shall be provided;

C. When a sidewalk crosses a parking lot drive aisle or other paved surface, it shall be distinguished from the paved surface through the use of special pavers, bricks, scored concrete, stamped concrete or painted surface;

D. Sidewalks and crosswalks shall be a minimum of five (5) feet wide for nonresidential development and four (4) feet wide for residential development (also refer to Ordinance 2525 SALDO for additional sidewalk requirements);

E. Sidewalks shall be provided along the full length of a building façade adjacent to a parking area or drive aisle;

F. Sidewalks internal to a parking lot may be constructed perpendicular to the parking bays or may be located within a planting median;

G. All off-street parking lots, including loading areas, shall be paved with an impervious surface;

H. Off-street parking spaces shall not be located closer than ten (10) feet to the right-of-way line of a public or private road. The area between the right-of-way and off-street parking spaces shall provide buffer yards in a manner to prevent the shining or glare of vehicular lights from the parking area onto the roadway;

I. When ingress and egress are less than twenty-two (22) feet in width, marked separate entrances and exits shall be provided so that traffic shall flow in one direction only;

J. The junction with the edge of a Public Street for a new entry or exit exceeding five percent (5%) gradient shall include a vertical curve to provide a suitable transition and leveling-out area;

K. Curbs shall be installed on sides of access points to contain vehicular traffic, protect pedestrians and reduce maintenance of adjacent seeded or planted areas;

L. All off-street parking lots shall include planting islands as required in §808, of this Ordinance;

M. Free-standing light standards shall provide a lighting system which shall furnish all parking areas, driveways, loading areas, entry ways, and pedestrian paths an average minimum of 0.5 foot candles lumens within such areas during hours of operation. All lighting shall be completely shielded from traffic on any public right of way and from all residential districts:

DRAFT

1) All pedestrian ways and walks, steps or change of grade of walks shall be lighted at all times. Details of proposed lighting fixtures and supports and the locations thereof shall be submitted as part of the Land Development Plan;

2) No light in excess of 0.5 foot-candles shall be emitted on adjoining property for a distance of more than twenty-five (25) feet from the property line of the property on which the source of the light is located; and

3) All lighting devices located within one hundred (100) feet of any property line adjoining a residential use or zoning classification shall be designed with shields, reflectors or refractor panels which direct and cut off the light at an angle that is less than ninety (90) degrees. "Cutoff angle" is defined as the angle formed by a line drawn from the direction of the light rays at the light source and a line perpendicular to the ground from the light source above which no light is emitted.

N. All parking spaces shall be clearly delineated by painted lines with durable paint in stripes a minimum of four (4) inches wide extending the entire length of the parking stall. The striping is to be maintained and repainted or reapplied as needed to effectively delineate parking spaces;

O. Bicycle Parking: Bicycle parking (Bike Racks) shall be provided at ten percent (10%) of the vehicle parking requirements, but not less than a minimum of two (2) bicycles for all multi-family dwellings (over ten (10) units) and commercial uses.

1) Bicycle parking shall be located and clearly designated in a safe and convenient location, at least as convenient as the majority of auto spaces provided; and

2) Bicycle parking facilities shall be designed to accommodate U-shaped locking devices and shall support bicycles in a stable position without damage to wheels, frame or other components and shall be securely anchored and of sufficient strength to resist vandalism and theft.

P. Parking Enclosure: A Parking Facility abutting a Slope exceeding three (3) to one (1) shall be enclosed on said Slope side by a guardrail or fence of a strength sufficient to prevent vehicles using the Parking Facility from going over the Slope; and

Q. Parking Lot Maneuvering Space: Maneuvering space shall be located completely off the Right-of-Way of a Public Street, place or Court. Maneuvering space shall be designed to prevent any Vehicles from backing into the Public Right-of-Way except for Single-family and Two-family Dwellings.

§903 Parking Garage Design Standards

A. The following regulations shall govern all Parking Garages:

1) A needs assessment study shall be supplied by the applicant in order to demonstrate the necessity of the proposed use in the district;

2) Such use shall not create detrimental impacts on the surrounding properties, taking into account the probable traffic congestion, the physical relationship of the proposed use and structure to the surrounding uses and structures, the impacts of traffic generation on surrounding residential and commercial uses, hours of operation, noise and light;

DRAFT

3) The use shall be located to minimize disruption to pedestrian movements;

4) Curb cuts shall be located a minimum of sixty (60) feet from other curb cuts;

5) The vehicle entrance and approach to the parking structure shall be clearly delineated by markings, striping and or signage as determined by the governing body;

6) The proposed use shall be subject to site plan review per this ordinance;

7) The height and bulk of the proposed structure shall be designed to minimize blocking of views from adjacent residential properties; and

8) A traffic analysis shall be submitted demonstrating that the proposed development will not create traffic congestion in the district.

§904 Minimum Parking Requirements

The minimum parking requirements are depicted in Table 902.

Table 902 Off-Street Parking Requirements

Use Category	Parking Requirement
Agriculture Farm	Determined by the Municipality after a Parking Demand Analysis
Air Bed and Breakfast	One space for every guest room and two for the permanent resident
Alcohol Treatment Facility	
Amusement use	Determined by the Municipality after a Parking Demand Analysis
Apartments and Garden Apartments	1.5 spaces for each dwelling unit plus I space for every 250 sq. ft. of gross floor area of rental office
Assisted Living Facility	0.5 spaces for each resident
Auditorium	One space for every four seats
Bank (See: Finance)	
Banquet Hall	One space for every three seats
Bar	One space for each 80 square feet of gross floor area
Beauty Parlor / Barber Shop	Two spaces per treatment station, but not less that one space per 250 square feet of gross floor area
Bed and Breakfast	One space for every guest room and two for the permanent resident
Bowling Alley	Three spaces for every lane
Brewery	One space for every employee on the largest shift, plus one space per four seats in any tasting room or other visitor facility open to the general public
Business Services	One space for every 250 square feet of gross floor area
Casino	
Cemetery	Determined by the Municipality after a Parking Demand Analysis

DRAFT

Child Care Center	One space for each teacher, administrator or other employee on peak shift plus one space for six persons based on regulated capacity
Commercial Communication Tower	Two spaces.
Community Center, Public	Determined by the Municipality after a Parking Demand Analysis
Condominium	
Contractor's Yard	One space per 1,000 square feet of gross floor area and outdoor storage area
Continuing Care Facility	One space for every three beds and one space for every employee on peak shift
Convention Center	Determined by the Municipality after a Parking Demand Analysis
Correctional Institution	Determined by the Municipality after a Parking Demand Analysis
Crematorium	25 spaces for the first parlor plus 10 spaces for each additional parlor
Dependent Dwelling	0.5 spaces for each resident
Day spa	One space for every 250 square feet of gross floor area
Distribution Center	Determined by the Municipality after a Parking Demand Analysis
Drive-Thru Establishment (Bank, Pharmacy, Etc.)	One space for every 250 square feet of gross floor area
Driving Range	Determined by the Municipality after a Parking Demand Analysis
Dry Cleaning	One space for every 500 square feet of gross floor area
Educational Institution	Determined by the Municipality after a Parking Demand Analysis
Finance, Insurance and Real Estate Office	One space for every 250 square feet of gross floor area
Fitness Center	
Food Processing Establishment	Determined by the Municipality after a Parking Demand Analysis
Forestry	None
Freight Terminal	One space for every 750 square feet of gross floor area
Funeral Home	25 spaces for the first parlor plus 10 spaces for each additional parlor
Fuel Service and/or Charging Station	One space for every 200 square feet of gross floor area
Garden Apartment	Two spaces for each Unit
Golf Course	Determined by the Municipality after a Parking Demand Analysis
Greenhouse	One space for every 200 square feet of gross floor area plus one space for every 1,000 square feet of outdoor display area
Group Home	
Gymnasium	One space for every 250 square feet of gross floor area
Health Club	One space for every 250 square feet of gross floor area
Helipad	Two spaces for every Helipad
Heliport	Two spaces for every Heliport

DRAFT

Helistop	Two spaces for every Helistop
Hospice	One space for every three beds and one space for every employee on peak shift
Hospital	One space for every 800 square feet of gross floor area
Hotel	One space for every sleeping room plus one space per 100 square feet of restaurant, lounge, meeting rooms, etc.
Kennel	One space for each employee plus 1 space for every three (3) pens/stalls used to board animals
Laundromat	One space for every 200 square feet of gross floor area
Library	One space for every 250 square feet of gross floor area
Light Manufacturing	One space for every three employees plus one for every 2,000 square feet of gross floor area
Limited Office	One space for every 250 square feet of gross floor area
Local Restaurant	One space for every 80 square feet of gross floor area
Local Retail Shop	One space for every 200 square feet of gross floor area
Manufactured Home	See: Single-Family Home
Manufacturing	One space for every three employees plus one space for every 2,000 square feet of gross floor area
Medical Clinic	One space for every 250 square feet of gross floor area
Medical Marijuana Dispensary	One space for every 250 square feet of gross floor area
Medical Marijuana Grow Facility	One space for every 1,000 square feet of gross floor area, or one space per employee on the largest shift—whichever is greater
Medical Office	
Membership Club	One space for every 100 square feet of gross floor area
Methadone Treatment Facility	One space for every 250 square feet of gross floor area
Mobile Home Park	Two spaces per dwelling unit
Motel	One space for every sleeping room plus one space per 100 square feet of restaurant, lounge, meeting rooms, etc.
Municipal Waste Landfill	Determined by the Municipality after a Parking Demand Analysis
Museum or Art Gallery	One space for every 500 square feet of gross floor area
Nature Preserve	Determined by the Municipality after a Parking Demand Analysis
Night Club	One space for every 80 square feet of gross floor area
Nursery	One space for every 200 square feet of gross floor area plus one space for every 1,000 square feet of outdoor display area
Nursing Home Facility	One space for every three beds and one space for every employee on peak shift
Office	One space for every 250 square feet of gross floor area
Outdoor Dining	One space for every 100 square feet of gross floor area
Park	Determined by the Municipality after a Parking Demand Analysis
Personal Care Home Facility	One space for every three beds and one space for every employee on peak shift
Personal Services	One for each 200 square feet of gross floor area

DRAFT

Place of Worship	One for every 75 square feet of gross floor area and five spaces for every secondary room of assembly
Public Use	Determined by the Municipality after a Parking Demand Analysis
Public Utility Facility	One space for each employee on peak shift and one space for each service vehicle stored on lot
Quarry	One space for each employee on peak shift
Recreation Club	One space for every 250 square feet of gross floor area
Research Development Facility	Determined by the Municipality after a Parking Demand Analysis
Restaurant, Sit-Down	One space for every 80 square feet of gross floor area
Restaurant, Carry-Out Only	One space for every 250 square feet of gross floor area
Restaurant, Drive-In	One space for every 100 square feet of gross floor area
Restaurant, Drive-Thru	One space for every 100 square feet of gross floor area
Retail Sales	One space for every 200 square feet of gross floor area
Retail Sales, Outdoor	One space for every 400 square feet of display area
Salvage Yard	One space for every 200 square feet of gross floor area plus one space for every 1 acre of outdoor salvage/storage area
School	One space for every four seats in the largest meeting room
Self Storage	One space for every three employees and one space for every 2,000 square feet of gross floor area
Sexually Oriented Business	One space for every 200 square feet of gross floor area
Shopping Center	One space for every 200 square feet of gross floor area
Short-Term Rental	
Single-Family Home	Two spaces per single-family home
Skating Rink	0.5 spaces / person in permitted max. occupancy
Skilled Nursing Facility	0.5 spaces for each resident
Solar Photovoltaic System	Determined by the Municipality after a Parking Demand Analysis
Stadium or Sports Arena	One spaces for each four seats
Substance Abuse Treatment Facility	One space for every 250 square feet of gross floor area
Tattoo Parlor/Body Piercing Studio	One space for every 200 square feet of gross floor area
Tavern (See: Bar)	
Theater	One space for every four seats
Tennis Club	Three spaces per court
Two-Family Home, Townhouse	Two spaces for each dwelling unit
Vehicle Leasing/Rental or Sales	One space for every 200 square feet of gross floor area plus one space for every 1,500 square feet of outdoor leasing/rental and sales display area
Vehicle Repair Service Garage	One space for every 200 square feet of gross floor area
Vehicle Salesroom	One space for every 200 square feet of gross floor area plus one space for every 400 square feet of office, sales and other space to be used by customers and sales staff
Vehicle Wash, Automatic and Self-Serve	Four spaces per stall.
Veterinary Hospital	One space for every 250 square feet of gross floor area

DRAFT

Vocational School	One space for every three seats utilized at maximum capacity or one for every 200 square feet of gross floor area, whichever is greater
Warehousing, Private	One space for every three employees and one space for every 2,000 square feet of gross floor area
Warehousing, Public	One space for every three employees and one space for every 2,000 square feet of gross floor area
Wind Energy Facility	Determined by the Municipality after a Parking Demand Analysis
All Other Uses Not Specifically Identified	Determined by the Municipality after a Parking Demand Analysis

§905 Parking Demand Analysis

When no specific parking requirement is listed in Table 902 or pursuant to the request of the Municipality, the applicant shall submit an analysis to establish the anticipated parking demand for the proposed development. The applicant shall submit the following:

A. Specific information related to the proposed development, including but not limited to: building area; employees; acreage; seating capacity; visitors; customers; shifts; deliveries; and dwelling units;

B. Estimates of parking demand, which may include a recommendation from the Institute of Transportation Engineers, data collected from uses that are the same or comparable to the proposed use or other relevant information;

C. The proposed traffic circulation for the development, as directed by the Traffic Engineer;

D. Any other information necessary to understand current and projected parking demand, as directed by the Municipal Traffic Engineer;

E. For multi-use developments, a Parking Demand Analysis shall be submitted to the Municipality based on the combined uses of all facilities on the site simultaneously; and

F. The following regulations shall govern a previously established development or multi-use developments where the new use or uses create a higher parking requirement:

    1) A parking analysis of the available parking must be submitted to the Municipality;

    2) All current and new uses of the development must be identified;

    3) The total building or tenant space square footage for each use must be identified;

    4) If the new use or uses demand a higher parking requirement, proof of existing and additional parking must be identified; and

    5) All accessible spaces, access aisles and signage shall be accordance with §906.

§906 ADA Accessible Parking Requirements

A. The number of ADA accessible parking spaces shall be in accordance with the Table 903 unless otherwise defined by the Americans with Disabilities Act or equivalent

DRAFT

provisions. The percentage of van accessible spaces shall also be provided in accordance with the Americans with Disabilities Act or equivalent provisions:

Table 903 ADA Accessible Parking Requirements

Total Number of Parking Spaces	Total Minimum Number of Accessible Parking Spaces (60" and 96" aisles)	Van-Accessible Parking Spaces with minimum 96" wide access aisle	Accessible Parking Spaces with minimum 60" wide access aisle
1 to 25	1	1	0
26 to 50	2	1	1
51 to 75	3	1	2
76 to 100	4	1	3
101 to 150	5	1	4
151 to 200	6	1	5
201 to 300	7	1	6
301 to 400	8	1	7
401 to 500	9	2	7
501 to 1,000	Two percent of total parking in each lot	One space out of eight accessible spaces	Seven spaces out of eight accessible spaces
1,001 and over	20 plus 1 for each 100 over 1,000	One space out of eight accessible spaces	Seven spaces out of eight accessible spaces

B. The design of accessible spaces shall be completed in accordance with the Americans with Disabilities Act and as depicted in Figures 901 and 902:

Figure 901 Design Standards for ADA Accessible Parking Spaces for <u>Cars</u>

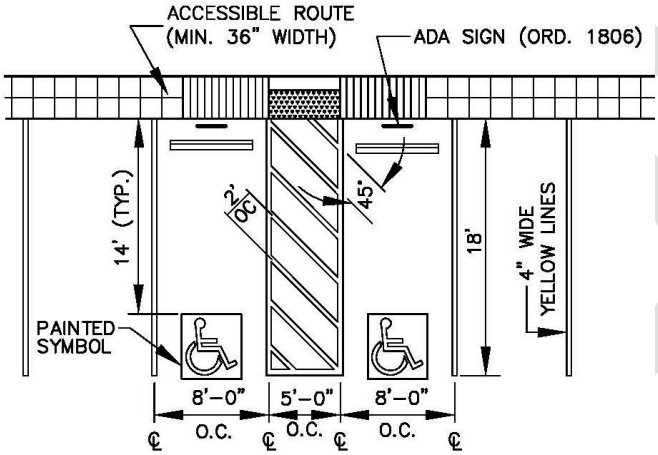

Figure 902 Design Standards for ADA Accessible Parking Spaces for <u>Vans</u>

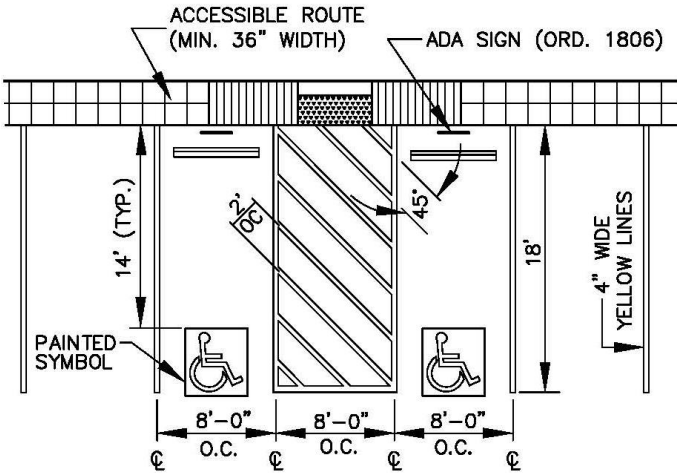

1) Accessible parking spaces serving a particular building shall be located on the shortest accessible route of travel from adjacent parking to an accessible structure. In parking facilities not serving a particular structure, accessible parking shall be located on the shortest accessible route of travel to an accessible pedestrian entrance of the parking facility;

2) Accessible parking spaces and access aisles shall be level with surface slopes not exceeding two percent (2%) in all directions; and

3) All accessible parking spaces shall be designated as reserved and marked with proper signage showing the symbol of accessibility, including a symbol sign mounted on a pole and a symbol painted on the parking surface. Additional signage shall be provided notifying patrons of municipal ordinances establishing a fee for the violation of parking in accessible parking areas.

§907 Off-Street Loading Berth

A. In addition to the off-street parking space(s) required in this Article, any building erected, converted or enlarged in any zoning district for non-residential uses shall provide adequate off-street berth(s) for loading and unloading of vehicles. The minimum size for a loading berth shall be fifty (50) feet in length and ten (10) feet in width with a minimum overhead clearance of fifteen (15) feet and six (6) inches. Each loading berth shall provide an appropriate means of access to a public roadway with an overhead clearance of fifteen (15) feet and six (6) inches;

B. The minimum requirements for off-street loading berth(s) in Table 904 shall apply to any non-residential use in excess of two thousand and five hundred (2,500) square feet of gross floor area:

Table 904 Loading Berth Requirements

Gross Square Feet of Building	Required Number of Berths
2,500 to 19,999 SF	1
20,000 up to 39,999 SF	2
For each additional 20,000 SF	1 additional berth

DRAFT

C. Loading berths shall be located and designed so that vehicles intended to use them can maneuver safely and conveniently to and from a public road and complete the loading and unloading operations without obstructing or interfering with use of any public road or any parking space or traffic lane;

D. All loading berths shall be located on the same lot as the use to be served. No loading berth shall be located within any required yard setback;

E. All loading berths shall be delineated by painted diagonal lines;

F. Sufficient screening shall be provided along all Lot Lines abutting any residentially zoned or developed property to buffer the Residential Use from all operations, materials and Vehicles within any Loading Space;

G. Loading areas accessory to Commercial Uses, shopping centers or planned developments shall be screened from public view;

H. Loading Spaces shall be designed and arranged to provide access to a Street or Alley in a manner that shall create the least possible interference with traffic movement. Access to and from the Right-of-Way to the Loading Spaces shall be referred to the Municipal Engineer for review and comment;

I. Loading and unloading operations shall be designed so they minimize the number and width of curb cuts;

J. Every Loading Space shall be surfaced with an asphalt or Portland cement binder pavement providing an all-weather, durable and dustless surface and shall be graded and drained to dispose of surface water accumulation by means of a positive stormwater drainage system;

K. No part of a loading area utilized for the access, maneuvering and temporary parking of delivery Vehicles shall also be used for the open-air Outdoor Storage of materials, merchandise and equipment; and

L. When any part of a loading area is also utilized for refuse and trash disposal and storage purposes, all outdoor containers shall be closed and permanently stationed in an area that is easily accessible for pick up and removal and that satisfies the screening requirements of this chapter.

~ END OF SECTION ~

DRAFT

THIS PAGE INTENTIONALLY LEFT BLANK

DRAFT

ARTICLE X – SIGNS

§1001 Application of Regulations

A. Signs shall be erected and maintained only in compliance with the provisions of this Article, other articles of this Ordinance and any and all regulations of the Municipality of Monroeville relating in any way to the erection, location, size, height, use, number, lighting, operation, alteration or maintenance of signs, billboard and/or outdoor advertising signs, banners and other similar advertising devices as defined herein;

B. No sign shall be erected, altered, painted, relocated, remodeled, expanded or maintained in any manner that is inconsistent with provisions of this Article and all other applicable Municipal Ordinances. A sign permit shall be obtained from the Zoning Officer prior to the erection or alternation of any sign, except as specified in §1002.B and §1002.J. The Zoning Officer shall review and approve all sign permit applications; and

C. A sign not expressly permitted is prohibited.

§1002 General Regulations Create diagrams to illustrate the different types of signs???

The following regulations shall apply to signs in all zoning districts:

A. Prohibited Signs

The following signs shall not be permitted in any zoning district:

1) Balloons or pennants;

2) Signs attached to trees, utility poles or official traffic control devices or signs;

3) Portable signs, including sandwich board signs;

4) Revolving signs;

5) Signs which imitate traffic control devices;

6) Signs attached to or painted on fences or retaining walls;

7) Strings of lights, flashers, flags, pennants or other display paraphernalia, except those displays specifically authorized by this Article;

8) Overhanging signs, as defined herein;

9) An advertising vehicle and/or trailer which is parked on a public right-of-way, public property or private property, other than temporarily for overnight storage on a site of a business or for loading, unloading or rendering a service at any location, which are visible from the public right-of-way and where the apparent purpose is to advertise a product or direct people to a business or activity located on the same or nearby property; and

10) Signs located within public rights-of-way. To preserve the order and cleanliness of the Municipal rights of way and public property; and to avoid the appearance of clutter; to protect property values; to avoid litter and growth of weeds around signs; to reduce traffic hazards caused by distraction to motorists and the

DRAFT

impairment of sight lines; to ensure that the Municipality remains an attractive place to live and work; the Municipality hereby prohibits all signs in the public right-of-way or on median barriers, telephone poles or pillars and trees, or any other structure located within the public rights-of-way anywhere within the territorial limits of the Municipality of Monroeville. *(Ordinance 2145)*

B. Exempt Signs

The following signs shall be exempt from these regulations:

1) Residential nameplate signs, as defined herein;

2) Holiday decorations displayed for recognized Federal or State holidays provided they do not interfere with traffic safety or do not, in any other way, become a public safety hazard;

3) Signs erected by a governmental agency, including street signs, directional signs and official traffic signs;

4) Flags of the United States of America and political subdivisions;

5) Any public notice or warning required by a valid and applicable federal, state, county or municipal law, regulation or ordinance;

6) Directional or warning signs and official signs or notices, danger and precautionary signs that relate to the premises; and signs where notices of railroad, other transportation, or communication company that are necessary for the direction, information or safety of the public;

7) Signs advertising the sale or lease of the real property on which they are located;

8) Signs advertising activities conducted on the premises;

9) Signs that the State or other agency of the State has approved for presentation on school bus waiting shelters;

10) Signs directing people to local towns, historical sites or attractions;

11) No trespassing and similar Signs; and

12) Memorial or historic plaques, markers, monuments or tablets. not to exceed five (5) square feet in area.

C. Abandonment

1) The owner or lessee of the premises upon which the sign is located when the business, which it advertises, is no longer conducted on the premises shall remove a sign. If the owner or lessee fails to remove it, the Zoning Officer shall give the owner or lessee thirty (30) day's written notice to remove it. Upon failure of the owner to comply, the Municipality shall remove the sign at the owner's expense and a lien shall be placed on the property;

2) Where a successor to a defunct business agrees to maintain the sign(s) as provided in this Article, this removal requirement shall not apply.

DRAFT

D. Conformance

1) No new sign shall be permitted on any property unless every sign on the property shall comply with this section.

E. Illumination

1) Illumination, when authorized by this Article, shall be directed upon the sign face and not toward adjoining properties or streets;
2) Lighting shall be stationary and constant in intensity and color at all times;

3) The intensity of any source of illumination of any sign, whether indirect or internal, shall be controlled so as to not exceed 1.0 foot candles of illumination at the property line;

4) External light bulb fixtures shall project no colors;

5) Lighting emitted by signage shall be subject to lighting standards otherwise applicable to the property;

6) External illumination shall be located at the top of the sign and deflected downward; and

7) All illuminated signs will require an electrical inspection.

F. Information

1) No sign shall contain any information or advertising for any product or service not sold on the premises.

G. Landscaping

a) All freestanding signs permitted in this Ordinance shall be landscaped with ornamental plantings and shrubs at the existing grade of such sign and shall screen the base from view from the public right-of-way. The area of such landscaping shall extend ten (10) feet or more in all directions from the existing structure. Landscaping shall not obstruct nor impede vehicular traffic or pedestrian movement; and

b) Landscape screening shall be maintained in full effect for the duration of the existence of the sign. No landscape screening shall be removed without prior approval of the Municipality and only upon submission of a new landscaping plan for screening of the base of such sign.

H. Maintenance and Inspection

1) All signs approved by the Zoning Officer shall be constructed of a durable material and maintained in good condition and shall comply with the Pennsylvania Uniform Construction Code (PA UCC) and amendments. Any sign found to be in an unsafe condition upon inspection by the Zoning Officer, or his/her designee, shall be declared to be a public nuisance and a notice shall be given to the owner, in writing, to repair or remove the sign within thirty (30) days after receiving written notice from the Zoning Officer. Upon failure of the owner to comply, the

DRAFT

Municipality shall remove the sign at the owner's expense and a lien shall be placed on the property.

2) All signs are to be maintained in good working order as intended upon installation in perpetuity. If any sign no longer functions as intended the sign shall be repaired or removed.

I. Removal of Signs

1) Whenever any business is discontinued or vacated, all signs relating to the discontinued or vacant business shall be removed within thirty (30) days of the discontinuance or vacation of the business. Whenever a temporary sign permit expires, the sign relating to the expired temporary sign permit shall be removed immediately. Upon failure of the owner to comply, the Municipality shall remove the sign at the owner's expense and a lien shall be placed on the property;

2) Any person, firm, corporation, association, or its employees or agents who affixed or placed a banned sign on public property or within the public rights-of-way shall remove the same within a period of twenty-four (24) hours of being notified by the Municipality of Monroeville. The Municipality reserves the right to remove and may remove any and all such signs, posters, banners or bumper stickers at any time from the public property and the public rights-of-way without notice. The reasonable cost of removal of the same by the Municipality may be billed and assessed to the person, firm, corporation. association who affixed or otherwise located said sign, poster, banner or bumper sticker within the public property or public rights-of-way. *(Ordinance 2145)*

3) NONPAYMENT FOR REMOVAL

a) If after three (3) days notice, said person, firm, corporation, or association does not reimburse the Municipality for the expenses of the removal of said signs, posters, banners or bumper stickers, after demand for payment by the Municipality, then the Solicitor of the Municipality of Monroeville is hereby authorized to initiate suit in the name of the Municipality of Monroeville to collect said cost in the manner provided by law. *(Ordinance 2145)*

4) PENALTIES

a) Any person, firm, employee, corporation, association, who shall violate or shall fail, neglect or refuse to comply with any provision of this Part, shall, upon conviction thereof, be sentenced to pay a fine of not more than Six Hundred Dollars and 00/100 ($600.00), plus costs and, in default of payment of said fine and costs, to a term of imprisonment not to exceed thirty (30) days. Provided, however, that each sign and each day of violation shall constitute a separate offense. *(Ordinance 2145)*

5) SEVERABILITY

a) In the event that there is a successful challenge to the constitutionality of this Ordinance, it is the intent of the Municipality that the offending words be separated from the constitutional portions of the Ordinance. The Municipality understands that in separating the unconstitutional provisions from the constitutional provisions, the Court will be further

DRAFT

restricting the placement of signs, and it is the Municipality of Monroeville's specific preference that the Court take such steps to sever the offending provisions. *(Ordinance 2145)*

J. Permits Required

1) A sign permit shall be required for the erection or placement of all signs with the following exceptions:

   a) Real Estate Signs, including temporary real estate directional signs; and

   b) Political Signs

2) The Zoning Officer shall issue the required sign permit upon submission of an application which complies with all applicable provisions of this Ordinance and payment of the required fee established from time to time by resolution by Municipal Council;

   a) Any Municipality of Monroeville civic or community organization may erect a temporary sign within the Municipality, however, said organization must file an application with the Municipality, except that said organization shall be exempt from the payment of the temporary sign fee.

3) Applications for a sign permit shall include the following information:

   a) Detailed drawings of the construction, design and size of the sign, including sign area calculations demonstrating compliance with this Ordinance. Drawings for freestanding signs and internally and externally illuminated signs shall be signed and sealed by an engineer registered with the Commonwealth of Pennsylvania;

   b) A site plan or survey showing the location of a monument sign;

   c) An elevation drawing showing the location of a wall sign;

   d) A site plan or survey of the property showing the location of a wall sign; and

   e) A landscape plan for a monument sign.

4) Sign permit applications and sign permits shall be governed by the same provisions of this Ordinance applicable to zoning permits;

5) A sign permit shall not obviate compliance with building permit requirements as required by the Pennsylvania Uniform Construction Code (PA UCC) and amendments; and

6) Any permit issued by the Zoning Officer for erection, alteration, replacement or relocation of any sign shall expire automatically within six (6) months of the date of issuance if work authorized by the permit has not been initiated and diligently pursued. The Zoning Officer may grant an extension.

K. Sign Area

DRAFT

1) The area of a sign shall include that area enclosed by one (1) continuous rectangle, connecting the extreme points or edges of a sign. That area includes all lettering, wording and accompanying designs, logos and symbols, together with the background on which they are displayed;

2) Business signs shall have an aggregate surface area including all faces not greater than two square feet for each foot of width of the zoning lot measured along the right-of-way, and no sign shall in any case exceed an area of two hundred and twenty-five (225) square feet; and

3) The sign area shall be computed by the measurement of all sign faces.

L. Sign Height

1) No Sign shall exceed twenty-four (24) feet in height as measured from the ground surface to the uppermost edge of the sign.

M. Sign Materials

1) Sign Faces and the individual letters, numerals and symbols shall be constructed of materials that are weather resistant, permanent, and non-combustible;

2) Signs shall be designed and anchored to withstand a steady horizontal wind speed of at least 70 miles per hour regardless of the direction of air movement. No loads, except those of the sign itself, plus normal snow and ice loads shall be placed on the supports of the sign.

N. Prohibition of Movement and Motion of Signs

1) No sign shall flash, revolve, rotate, swing, undulate, and emit noise or other distracting movement.

O. Sign Location

1) Except for political signs, billboard and/or outdoor advertising signs, off-site directional and civic event signs where authorized by this Ordinance, all signs shall be located on the premises which they are intended to serve;

2) No signs, except official traffic signs of the Municipality, county or state, on Streets within their respective jurisdiction, shall be erected within two (2) feet of any Street, or within any Public Right-of-Way unless otherwise provided herein. All signs located on properties adjacent to Public rights of way shall allow adequate clearance for motor Vehicles and pedestrians.

3) No sign shall project over any public sidewalk or right-of-way;

4) No person, firm, corporation, association, their employees or agents shall nail, tack, glue, hang or otherwise affix or locate any sign, poster, and/or banner within or on public property or within public rights-of-way in the Municipality of Monroeville;

5) A sign located on a roof shall not extend more than fifteen (15) feet above the roof level and shall not be so placed as to interfere with openings in the roof or to prevent free access from one part of the roof to any other part; and

DRAFT

6) Any sign attached permanently against a wall shall be not less than eight (8) feet above the sidewalk or ground if it is not illuminated and not less than twelve (12) feet if illuminated. Any such sign shall not project above the wall to which it is attached, shall not cover in part or in whole any wall opening, and shall not protrude more than twelve (12) inches from the wall to which it is attached.

P. Visibility

1) No sign shall be located in such a location that it will cause a hazard by obstructing visibility for traffic on a street or obscuring a traffic signal or other traffic control device. No sign, other than official traffic signs, shall hang over or be erected within the right-of-way of any street. No sign shall be located within the clear sight triangle of any intersection.

§1003 Specific Sign Regulations

A. Address Sign

1) A sign or individual lettering numbering that designate the street number and/or street name for identification purposes, as designated by the United States Postal Service.

2) Buildings shall have approved address numbers placed in a position to be plainly legible and visible from the street or road fronting the property and;

3) The numbers shall be in contrast with their background;

4) Address numbers shall be Arabic numerals or alphabet letters;

5) Numbers and alphabet letters shall be a minimum of four (4) inches (102mm) high with a minimum stroke width of one half (0.5) inch (12.7 mm); and

6) Refer to Ordinance 2685 and the International Property Maintenance Code (IPMC) 2015 section 304.3 Premises Identification.

B. Advertising Vehicle and/or Trailer

An advertising vehicle and/or trailer may be permitted on a site if:

1) The vehicle is use for temporary overnight storage on a site of a business;

2) The vehicle is in the process of loading, unloading or rendering a service at any location:

3) The vehicle is a source of transportation for the employees during normal business hours.

C. Awning Sign

1) Awning signs shall have an aggregate illustrative surface area not greater than two (2) square feet for each linear foot of building façade measured along each right of way(s);

DRAFT

2) The illustrative surface area(s) shall not exceed a total area of two hundred and twenty-five (225) square feet; and

3) All illuminated awnings require a building permit, sealed engineered drawings and electrical inspection.

D. Banner (Temporary Sign)

1) A Banner, not exceeding one hundred (100) square feet in area, may be permitted by the Zoning Officer for a period of thirty (30) days or less provided that:

a) The banner will be safely installed;

b) The banner shall not be located less than ten (10) feet from the right of way;

c) The banner shall not exceed fifteen (15) feet above the base of the roof;

d) The banner shall not conflict with or obstruct vehicular or pedestrian traffic; and

2) One (1) Banner may be installed for a period longer than thirty (30) days upon approval as a special exception from the Zoning Hearing Board.

E. Billboard and or Outdoor Advertising Sign

1) A Billboard and or Outdoor Advertising Sign shall comply with Conditional Use §504.G

F. Canopy, Freestanding

1) A Canopy sign shall have an aggregate surface area not greater than two (2) square feet for each linear foot of the building façade measured along each right of way(s) and no sign or combination of two (2) signs shall in any case exceed a total area of two hundred and twenty-five (225) square feet;

2) The total square feet of each canopy sign face must be calculated into the maximum permitted wall signage area;

3) A freestanding canopy must meet all yard and area requirements as specified in Article III, District Regulations; and

4) A building permit, sealed engineered drawings, and a certified electrical inspection shall be required.

G. Civic Event Sign, Off-Premise

1) An Off-Premise Civic Event sign, non-illuminated except by indirect light and not exceeding six (6) square feet in surface area that does not obstruct vehicular traffic flow or visibility, is permitted. Where such a sign obstructs or conflicts with vehicular visibility or traffic flow, the Municipality shall confiscate it.

H. Civic Event Sign, On-Premise

DRAFT

1) An On-Premise Civic Event sign, non-illuminated except by indirect light and not exceeding thirty-two (32) square feet in surface area is permitted in connection with any church, school, country club or similar public building. The organization must file a sign application with the Municipality. The organization will be exempt from the payment of the temporary sign fee.

I. Copy Sign

1) A Copy Sign shall have an aggregate surface area not greater than two (2) square feet for each linear foot of the building façade measured along each right of way(s) and no sign or combination of two (2) signs shall in any case exceed a total area of two hundred and twenty-five (225) square feet; and

2) The total square feet of each Copy Sign face must be calculated into the maximum permitted wall signage area.

J. Development Sign

1) A temporary Development sign not exceeding one hundred (100) square feet in area indicating that the premise is in the process of subdivision or development is permitted.

K. Directional Sign, Off-Premise

An Off-Premise Directional sign, directing vehicular and pedestrian traffic to a major shopping center, hospital, college or industrial facility may be located at or near the intersection of public streets as a special exception approved by the Zoning Hearing Board if:

1) Such sign(s) shall be limited to those businesses having fifty (50) or more on-premise employees or groups of three (3) or more businesses having a common identification such as a shopping center, hospital, college or industrial facility;

2) Such sign(s) shall be no greater than four (4) feet in width by eight (8) inches in height and shall have white letters on a blue background;

3) No more than one set of posts shall be installed on any approach to an intersection, and no more than six (6) directional signs shall be attached to each set of posts;

4) Appropriate permits from state, county or municipal authorities having roadway jurisdiction shall be obtained prior to the issuance of a municipal sign permit; and

5) The appropriate permitting authority may remove such signs.

L. Directional Sign, On-Premise

1) An On-Premise Directional sign(s) shall be installed within the property in such a manner that they do not obstruct the safety and vision of vehicular or pedestrian traffic or otherwise constitute a hazard.

M. Directory Sign

DRAFT

1) A single or double-faced Directory sign having an aggregate surface area not greater than two hundred and twenty-five (225) square feet or less may be installed upon approval as a variance from the Zoning Hearing Board.

N. Double-Faced Sign

1) See: "Free Standing Sign".

O. Electronic Message Center

1) A secondary sign with a black background/face that includes provisions for changeable copy, multi-colored, advertising an onsite product/service/activity, public service message, time or temperature sign;

2) Any Electronic Message Center sign that changes physical position by any movement or rotation or that gives the visual impression of such movement or rotation or copies the impression of a traffic control device, signal, lighting or signage is prohibited;

3) Running, flashing or other distracting movement of the changeable copy is prohibited;

4) Any Electronic Message Center sign shall not exceed a maximum size of twenty-four (24) square feet per sign face and must be calculated into the maximum permitted sign area. Additionally, the character height shall not exceed eighteen (18) inches, with no more than three (3) lines of copy per electronic sign board and all copy or other images that physically change or give the appearance of change shall be displayed at intervals of not less than fifteen (15) seconds;

5) In addition to the twenty-four (24) square feet per side, an electronic message center secondary sign, single or double faced, with a black background/face that includes provisions for multi-colored, changeable copy, electronic fuel pricing sign(s), may be permitted. The total electronic fuel pricing sign(s) shall not exceed a maximum of twenty-four (24) square feet per side and must be calculated into the maximum permitted sign area, not to exceed two hundred twenty-five (225) square feet;

6) Electronic Message Centers are not permitted in Residential areas—Schools, Places of Worship and Public Use Facilities are exempted;

7) A certified electrical inspection shall be required.

P. Freestanding Sign (Also See: Ground, Logo, Monument, Pole / Pylon)

1) All Freestanding sign(s) shall not encroach into any required yard setback as required in Article III, District Regulations;

2) A Freestanding sign shall not exceed twenty-four (24) feet in height at grade;

3) If a business fronts on more than one (1) thoroughfare, then an additional Freestanding sign may be permitted provided that each sign shall be located at least one hundred (100) linear feet apart and on separate thoroughfares;
4) A Freestanding sign shall only advertise a product or service sold on the premises;

DRAFT

5) There shall be only one (1) sign per business on the premises; and

6) A building permit, sealed engineered drawings, and a certified electrical inspection shall be required.

Q. Ground Sign (Also See: Free-Standing, Logo, Monument, Pole / Pylon)

1) All Ground sign(s) shall not encroach into any required yard setback as required in Article III, District Regulations;

2) A Ground sign shall not exceed twenty-four (24) feet in height at grade;

3) If a business fronts on more than one (1) thoroughfare, then an additional Ground sign may be permitted provided that each sign shall be located at least one hundred (100) linear feet apart and on separate thoroughfares;

4) A Ground sign shall only advertise a product or service sold on the premises;

5) There shall be only one (1) sign per business on the premises; and

6) A building permit, sealed engineered drawings, and a certified electrical inspection shall be required.

R. Historical Marker / Plaque / Tablet / Sign

1) The marker/plaque/tablet/sign will not be used for commercial or advertising purposes;

2) Where such sign obstructs or conflicts with vehicular visibility or traffic flow, the Municipality shall confiscate it; and

3) The signs are not attached to utility poles or official traffic control devices or signs.

S. Illuminated Sign

1) No sign shall contain any information or advertising for any product not sold on the premises;

2) Illumination of the sign shall be designed so that it shall be focused on the face of the display itself so as to prevent glare upon the surrounding area; and

3) All sources of illumination shall be external and equipped with shields to prevent spillage of light off the sign.

T. Logo Sign (Also See: Free-Standing, Ground, Monument, Pole / Pylon)

1) In addition to a business sign (located on the building), one single or double faced, free-standing sign may be erected on a site occupied by any legal business or industry which has a lot area greater than one-half acre and on which all structures are set back forty feet or more from the property lines if:

a) The sign displays nothing other than the logotype, trademark, or name of the company or commercial center on the premises;

DRAFT

b) The sign has a height no greater than twenty-four (24) feet above basic grade and is no closer than ten feet to any property line;

c) The sign shall have an aggregate area including all faces no greater than one square foot for every linear foot of property frontage on a public right-of-way; but shall not in any case exceed an area of two hundred and twenty-five (225) square feet. The maximum permitted sign area may be divided between a maximum of two logo signs provided such signs are not less than one hundred (100) feet apart;

d) Where a property fronts on more than one public right-of-way, a logo sign or signs may be installed on each right-of-way;

e) A Logo Sign shall only advertise a product or service sold on the premises; and

f) A building permit, sealed engineered drawings, and a certified electrical inspection shall be required.

U. Manual Message Center

1) A Manual Message Center sign will be considered as a secondary sign;

2) The Manual Message Center sign shall not exceed a maximum size of twenty-four (24) square feet per sign face and must be calculated into the maximum permitted sign area.

V. Memorial Sign

1) A single or double faced memorial plaque or tablet, to include grave markers or other remembrances of persons or events may be erected if:

a) The plaque or tablet will not be used for commercial or advertising purposes;

b) Where such sign obstructs or conflicts with vehicular visibility or traffic flow, the Municipality shall confiscate it; and

c) The signs are not attached to utility poles or official traffic control devices or signs.

W. Monument Sign (Also See: Free-Standing, Ground, Logo, Pole / Pylon)

1) A single or double-faced, free-standing monument sign(s) having an aggregate surface area not to exceed one (1) square foot for each linear foot of the property frontage measured along each thoroughfare and with no sign or combination of two (2) signs exceeding a total area of two hundred and twenty-five (225) square feet, may be erected on a site if:

a) All monument signs shall not encroach into in any required yard setback as required in Article III, District Regulations;

DRAFT

b) All monument sign shall not exceed twenty-four (24) feet in height at grade;

c) If a business fronts on more than one (1) thoroughfare then an additional monument sign may be permitted provided that each sign shall be located at least one hundred (100) linear feet apart and on separate thoroughfares;

d) A monument sign shall only advertise a product or service sold on the premises; and

e) A building permit, sealed engineered drawings, and a certified electrical inspection shall be required.

X. Movable Sign

1) A single or double-faced on-premise movable sign having an aggregate surface area not exceeding one hundred (100) square feet may be permitted by the Zoning Officer for a period of thirty (30) days, provided the sign be safely installed. One (1) movable sign may be installed for a period longer than thirty (30) days upon approval as a variance from the Zoning Hearing Board.

Y. Mural

1) A Mural having an aggregate surface area not greater than two hundred and twenty-five (225) square feet may be installed upon approval as a variance from the Zoning Hearing Board.

Z. Nameplate (Multi-Family) Sign

1) A multi-family nameplate sign may be attached to a multi-family structure, provided that such sign shall not exceed twelve (12) square feet in surface area and not protrude more than twelve (12) inches from the wall to which it is attached. The sign shall identify a multi-family dwelling; and

2) For any multi-family dwelling that is more than four (4) stories in height, a nameplate sign that is permanently attached to a wall of the structure and identifies only the name of the development shall be permitted, but the surface area shall not exceed twenty-five percent (25%) of the total area of the exposed wall surface of the side of the structure to which the sign is affixed, and in no case shall the sign exceed one hundred (100) square feet.

AA. Nameplate Sign

1) A single nameplate sign not exceeding one and one-half (1½) square feet in surface area, attached to the single-family structure and not internally illuminated, shall be permitted. The sign shall announce the name and or address of the occupant of the premise or the name of the building.

BB. Neon Sign, Exterior

Neon sign(s) may be erected on the premise occupied by a legal business or industry. Neon sign(s) may have aggregate surface area of not greater than two (2) square feet for each linear foot of building façade measured along the right(s)-of-way. A neon

DRAFT

sign(s) or combination of two (2) signs shall not exceed a total area of two hundred and twenty-five (225) square feet. A neon sign may be erected if:

1) No sign shall contain any information or advertising for any product not sold on the premises;

2) The sign attached permanently against a wall shall not be less than ten (10) feet above the sidewalk or ground and shall not protrude more than twelve (12) inches from the wall to which it is attached;

3) The sign shall not project above the wall to which it is attached;

4) The sign shall not exceed ten percent (10%) of the area of the window in which it is placed; and

5) A certified electrical inspection shall be required.

CC. Neon Sign, Interior

A Neon sign(s) having a surface area not greater than twenty-four (24) square feet may be erected if:

1) There shall be no more than one (1) sign per window;

2) The sign shall not exceed ten percent (10%) of the area of the window in which it is placed; and

3) A certified electrical inspection shall be required.

DD. Pennant

1) See: “Temporary Sign”.

EE. Personal Expression Sign

A Personal Expression sign expressing an opinion, interest or position, is permitted under the following conditions:

1) The sign is non-illuminated except by indirect light;

2) The sign does not exceed six (6) square feet in surface area;

3) The sign does not obstruct pedestrian or vehicular traffic flow or visibility;

4) Where such a sign conflicts with pedestrian or vehicular visibility or traffic flow, the Municipality shall confiscate it;

5) The applicant must file a sign permit application with the Municipality; and

6) Political signs are not considered Personal Expression signs.

FF. Pole/Pylon Sign (Also See: Free-Standing, Ground, Logo, Monument)

DRAFT

Single or double-faced, free-standing Pole/Pylon sign(s) having an aggregate surface area not to exceed one (1) square foot for each linear foot of the property frontage measured along each right of way(s) and no sign or combination of two (2) signs exceeding a total area of two hundred and twenty-five (225) square feet may be erected on a site if:

1) All Pole/Pylon sign(s) shall not encroach into any required yard setback as required in Article III, District Regulations;

2) A Pole/Pylon sign shall not exceed twenty-four (24) feet in height at grade;

3) If a business fronts on more than one (1) thoroughfare, then an additional Pole/Pylon sign may be permitted provided that each sign shall be located at least one hundred (100) linear feet apart and on separate thoroughfares;

4) A Pole/Pylon sign shall only advertise a product or service sold on the premises;

5) There shall be only one (1) sign per business on the premises; and

6) A building permit, sealed engineered drawings, and a certified electrical inspection shall be required.

GG. Political Sign

A Political sign may be erected on a site if:

1) A sign can be placed on property in any zoning district subject to consent of the property owner;

2) No temporary political sign may be constructed prior to twenty (20) days prior to any primary, general or special election to be held;

3) Temporary political sign must be removed within five (5) days after the primary, general or special election to be held.

4) The sign shall be located not less than ten (10) feet from the curb line or right of way;

5) The sign shall not be illuminated;

6) The sign shall not conflict with or obstruct vehicular or pedestrian traffic;

7) The sign shall not be greater than sixteen (16) square feet in size in a residential zoning district; and

8) The sign shall not be greater than thirty-two (32) square feet in size in all other zoning districts.

HH. Projection Sign

A single or double-faced Projection Sign having an aggregate surface area of not greater than thirty-two (32) square feet may be erected if:

DRAFT

1) No sign shall contain any information or advertising for any product or service not sold on the premises;

2) The sign shall be attached permanently against a primary structure and should not be less ten (10) than feet above the sidewalk or fifteen (15) feet and six (6) inches above a vehicular accessible area;

3) The sign shall not protrude more than three (3) feet from the primary structure to which it is attached; and

4) The sign shall not project above the wall to which it is attached and shall not cover, in part or in whole, any wall opening.

II. Public Interest Sign (Bulletin Board)

A sign on private property that displays information pertinent to the safety or legal responsibilities of the public such as "Warning or No Trespassing" signs may be erected if:

1) The signs are not attached to utility poles or official traffic control devices or signs.

JJ. Pylon Sign

1) See: "Pole Sign."

KK. Real Estate Sign (Temporary Sign)

A Real Estate Sign may be erected on a site if:

1) The sign shall be limited to advertising the sale or lease of the premise on which it is located;

2) The sign shall be no closer than ten (10) feet from the curb line or right of way;

3) The sign shall not be illuminated;

4) The sign shall not conflict with or obstruct vehicular or pedestrian traffic;

5) The sign shall not be greater than twenty-five (25) square feet in size in all other uses;

6) A temporary real estate directional sign to direct potential buyers to residential properties in Monroeville being offered for sale may be permitted on Sundays and on special showing days but not during rush hours, if it is not illuminated, no larger in surface area than six (6) square feet and does not conflict with or confuse traffic flow. Where such sign is in conflict with any of these requirements, it shall be confiscated by the Municipality.

LL. Residential Plan Identification Sign

1) All such signs shall be of the monument sign type;

2) Two single-sided signs are allowed at each entrance on an arterial or collector street;

DRAFT

3) The monument must have brick, stone, or decorative masonry construction on the base, sides, and top;

4) The sign shall not encroach into in any required yard setback as required in Article III, District Regulations;

5) The sign height shall not exceed eight (8) feet;

6) A Development sign not exceeding one hundred (100) square feet in area indicating that the premise is in the process of subdivision or development is permitted;

7) Signs that are no longer in use must be removed. If official notice is provided, removal must occur within 30 days; and

8) Signs that are in disrepair shall be repaired. If official notice is provided, repairs must occur within 30 days, or sign shall be removed

MM. Revolving Sign

1) Revolving signs are not permitted.

NN. Roof Sign

A single or double-faced Roof Sign having an aggregate surface area not greater than two (2) square feet for each linear foot of the building frontage measured along the right of way and in any case not exceeding a total area of two hundred and twenty-five (225) square feet may be erected on a site if:

1) No sign shall contain any information or advertising for any product or service not sold on the premises;

2) A Roof Sign shall not encroach into in any required yard setback as required in Article III, District Regulations;

3) The top of the sign shall not exceed fifteen (15) feet above the base of the roof;

4) No sign shall project over any public sidewalk or right-of-way;

5) The sign shall not be placed as to interfere with the openings in the roof or to prevent free access from one (1) part of the roof to any other part; and

6) A building permit, sealed engineered drawings, and a certified electrical inspection shall be required.

OO. Temporary Event Display

A temporary event display (ex. inflatable balloon, character, tent or vehicle) may be permitted by the Zoning Officer if:

1) The temporary event display will be safely installed;

DRAFT

2) The temporary event display shall not be located less than ten (10) feet from the right of way;
3) The temporary event display shall not exceed fifteen (15) feet above the base of the roof;

4) The temporary event display shall not conflict with or obstruct vehicular or pedestrian traffic;

5) A temporary event display may be permitted by the Zoning Officer for a period of thirty (30) days or less; and

6) One (1) temporary event display may be installed for a period longer than thirty (30) days upon approval as a special exception from the Zoning Hearing Board.

PP. Temporary Sign

A single-faced sign having an aggregate surface area not greater than one hundred (100) square feet may be permitted if:

1) The temporary sign will be safely installed;

2) The temporary sign shall not be located less than ten (10) feet from the right of way;

3) The temporary sign shall not exceed fifteen (15) feet above the base of the roof;

4) The temporary sign shall not conflict with or obstruct vehicular or pedestrian traffic;

5) A temporary sign, may be permitted by the Zoning Officer for a period of thirty (30) days or less; and

6) One (1) temporary sign may be installed for a period longer than thirty (30) days upon approval as a special exception from the Zoning Hearing Board.

QQ. Wall Sign

A Wall Sign shall have an aggregate surface area not greater than two (2) square feet for each linear foot of the building façade measured along each thoroughfare or right(s) of way, and no sign or combination of two (2) signs shall in any case exceed a total area of two hundred and twenty-five (225) square feet. The sign(s) may be erected if:

1) No sign shall contain any information or advertising for any product or services not sold on the premises;

2) All structures are set back based on Article III, District Regulations;

3) The sign attached permanently against a primary structure shall not be less than ten (10) feet above the sidewalk or ground;

4) The sign shall not protrude more than twelve (12) inches from the primary structure to which it is attached;

5) No sign shall project over any public sidewalk or right-of-way;

DRAFT

6) The sign shall not project above the wall to which it is attached and shall not cover, in part or in whole, any wall opening;

7) Only one (1) sign can be installed for each building facade that has frontage on a thoroughfare;

8) Signs shall be located one hundred (100) linear feet apart when installing a sign along each separate thoroughfare; and

9) A building permit and certified electrical inspection shall be required.

RR. Window Sign

A Window Sign(s) not exceeding twenty-four (24) square feet may be erected if:

1) There shall be no more than one (1) sign per window; and

2) The sign shall not to exceed ten percent (10%) of each window surface.

SS. Yard Sale Sign (Temporary Sign)

A Yard Sale Sign may be erected if:

1) The sign shall be located not less than ten (10) feet from the curb line or right of way;

2) The sign shall not be illuminated;

3) The sign shall not conflict with or obstruct vehicular or pedestrian traffic;

4) The sign shall not be greater than sixteen (16) square feet in size in a residential zoning district;

5) The sign shall not be greater than thirty-two (32) square feet in size in all other zoning districts; and

6) The sign shall not be attached to a utility pole.

§1004 Signs Authorized in All Residential Zoning Districts

The following signs shall be permitted in all Residential zoning districts:

A. *Address Sign*; subject to the requirements of §1003.A.
~~A.~~B. *Electronic Message Center (Only permitted for Schools, Places of Worship and Public Use Facilities*, subject to the requirements of §1003.O.

~~B.~~C. *Historical Marker/Sign*; subject to the requirements of §1003.R.

~~C.~~D. *Memorial Sign*; subject to the requirements of §1003.V.

~~D.~~E. *Name Plate Sign,* subject to the requirements of §1003.AA.

~~E.~~F. *Nameplate (Multi-Family) Sign*, subject to the requirements of §1003.Z.

DRAFT

~~F.~~G. *Personal Expression Sign*; subject to the requirements of §1003.EE.

~~G.~~H. *Political Sign*, subject to the requirements of §1003.GG.

~~H.~~I. *Public Interest Sign*; subject to the requirements of §1003.II.

~~I.~~J. *Real Estate Sign*, subject to the requirements of §1003.KK.

~~J.~~K. *Residential Plan Identification Sign*; subject to the requirements of §1003.LL.

~~K.~~L. *Yard Sale Sign*; subject to the requirements of §1003.SS.

§1005 Signs Authorized in the Conservancy Zoning District

The following types of *signs* shall be permitted in the Conservancy zoning district:

A. *Address Sign*, subject to the requirements of §1003.A.

B. *Memorial Sign*, subject to the requirements of §1003.V.

C. *Name Plate Sign*, subject to the requirements of §1003.AA.

D. *Nameplate (Multi-Family) Sign*, subject to the requirements of §1003.Z.

E. *Personal Expression Sign*; subject to the requirements of §1003.EE.

F. *Political Sign*, subject to the requirements of §1003.GG.

G. *Public Interest Sign*; subject to the requirements of §1003.II.

H. *Real Estate Sign*, subject to the requirements of §1003.KK.

I. *Residential Plan Identification Sign*; subject to the requirements of §1003.LL.

J. *Yard Sale Sign*; subject to the requirements of §1003.SS.

K. A *non-residential use* in the S Conservancy zoning district shall be permitted one (1) *monument sign* with a maximum *sign* area of thirty-two (32) square feet. The maximum *height* of the *sign* shall be six (6) feet above the ground.

§1006 Signs Permitted in Commercial, Special Use and Manufacturing Zoning Districts

The following types of *signs* shall be permitted in the *Commercial*, *Special* and *Manufacturing* zoning districts:

A. *Address Sign*; subject to the requirements of §1003.A.

B. Advertising Vehicle and/or Trailer; subject to the requirements of §1003.B

C. *Awning Sign*, subject to the requirements of §1003.C.

D. *Banner*, subject to the requirements of §1003.D.

DRAFT

E. Billboard and/or Outdoor Advertising Sign; subject to the requirements of §1003.E

F. *Canopy*, Freestanding, subject to the requirements of §1003.F.

G. *Civic Event Sign, Off-Premise*, subject to the requirements of §1003.G.

H. *Civic Event Sign, On-Premise*, subject to the requirements of §1003.H.

I. *Development Sign*, subject to the requirements of §1003.J.

J. *Directional Sign, Off-Premise*, subject to the requirements of §1003.K.

K. *Directional Sign, On-Premise*, subject to the requirements of §1003.L.

L. *Directory Sign*, subject to the requirements of §1003.M.

M. *Electronic Message Center*, subject to the requirements of §1003.O.

N. Freestanding Sign; subject to the requirements of §1003.P.

O. Ground Sign; subject to the requirements of §1003.Q.

P. Historical Marker; subject to the requirements of §1003.R.

Q. Illuminated Sign; subject to the requirements of §1003.S.

R. *Manual Message Center*, subject to the requirements of §1003.U.

S. *Memorial Sign*; subject to the requirements of §1003.V.

T. *Monument Sign*, subject to the requirements of §1003.W.

U. *Movable Sign*, subject to the requirements of §1003.X.

V. *Mural*, subject to the requirements of §1003.Y.

W. Nameplate; subject to the requirements of §1003.Z and §1003.AA.

X. *Neon Sign*, Exterior, subject to the requirements of §1003.BB.

Y. *Neon Sign*, Interior, subject to the requirements of §1003.CC.

Z. *Personal Expression Sign*; subject to the requirements of §1003.EE.

AA. *Pole/Pylon Sign*, subject to the requirements of §1003.FF.

BB. *Political Sign*, subject to the requirements of §1003.GG.

CC. *Projection Sign*, subject to the requirements of §1003.HH.

DD. *Public Interest Sign*; subject to the requirements of §1003.II.

EE. *Real Estate Sign*, subject to the requirements of §1003.KK.

DRAFT

FF. *Residential Plan Identification Sign*; subject to the requirements of §1003.LL.

GG. *Roof Sign*, subject to the requirements of §1003.NN.

HH. *Temporary Sign*, subject to the requirements of §1003.PP.

II. *Wall Sign,* subject to the requirements of §1003.QQ.

JJ. *Window Sign*, subject to the requirements of §1003.RR.

KK. *Yard Sale Sign*, subject to the requirements of §1003.SS.

§1007 Signs Authorized for Shopping Center and Multi-Tenant Developments

A. The standards contained in this section shall apply to all parcels within a shopping center or multi-tenant development, as defined in this Article;

B. Each shopping center or multi-tenant development shall be permitted one (1) freestanding sign as regulated in §1006 of this article. If a business fronts on more than one (1) thoroughfare, one (1) additional sign may be permitted provided that each sign shall be located at least one hundred (100) linear feet apart and on separate thoroughfares;

C. The total aggregate amount of wall signage in a shopping center or multi-tenant development shall not exceed two (2) square feet for every linear foot of building frontage along each thoroughfare, not to exceed an aggregate of two hundred and twenty-five (225) square feet;

D. Unless otherwise stated in this section, regulations in §1006 of this Article shall apply to signs in a shopping center or multi-tenant development;

E. Master Sign Plan for a Shopping Center or Multi-Tenant Developments:

1) No sign permits shall be issued unless and until a master sign plan for the shopping center or multi-tenant development on which the signs will be erected has been submitted to the Zoning Officer for approval;

2) For any shopping center or multi-tenant development in which the developer and/or property owner proposes to erect one (1) or more signs requiring sign permit approval, the following information shall be required:

a) Two (2) copies of a site plan for the lot or site at a scale of one (1) inch to fifty (50) feet or less, depicting an accurate indication of the plot plan of the proposed location of each present and future sign of any type and all applicable utility locations;

b) Two (2) copies of all signage and building elevations drawn to scale of each side of the building on which a sign is placed or will be placed showing the following:

i. Lighting

ii. Location of each existing and proposed sign on the building

DRAFT

iii. Material

iv. Color scheme

v. Lettering or graphic scale

vi. Location of all applicable utility locations

c) Two (2) copies of the landscaping plan; and

d) Computation of the maximum total sign area, the maximum area of individual signs, the height of signs, and the number of signs allowed on the lot or site.

3) The master sign plan may contain such other restrictions as the landowners of the lot or site may reasonably determine;

4) A master sign plan may be amended by filing a new master sign plan that conforms to all the requirements of this Article; and

5) After approval of a master sign plan, no sign shall be erected, placed, painted or maintained except in conformance with such plan and such plan shall be enforced in the same way as any provision in this Article.

F. Standards for Freestanding Signs in Shopping Center and Multi-Tenant Development

1) The maximum size of any Freestanding Sign shall be two hundred and twenty-five (225) square feet;

2) The maximum height of any pole/pylon sign shall not exceed twenty-four (24) feet;

3) The maximum height of any monument sign shall not exceed ten (10) feet;

4) The Freestanding Signs shall be at least ten (10) feet from the public right of way and twenty (20) feet from rear and side yard lot lines.

G. Standards for Tenant Wall Sign in Shopping Center and Multi-Tenant Development

1) Each tenant within a shopping center and multi-tenant development shall be permitted one (1) wall sign; and

2) The sign area of a wall sign shall not exceed two (2) square feet for each linear foot of building frontage. The wall sign shall not exceed two hundred and twenty-five (225) square feet.

~ END OF SECTION ~

DRAFT

THIS PAGE INTENTIONALLY LEFT BLANK

DRAFT

The purpose of this Section is to regulate Nonconforming Uses, Nonconforming Buildings and Structures, Nonconforming Lots and Nonconforming Signs. This section is designed to guide the future use of the Municipality's land by encouraging the development of desirable residential, commercial and other Uses with appropriate groupings of compatible and related Uses to promote and protect the public health, safety and general welfare. The regulations of this Section are intended to restrict further investments that would make nonconformities more permanent in their location in inappropriate districts as well as to afford opportunities for creative use and reuse of those other nonconformities that contribute to a neighborhood and are consistent with the goals of the Comprehensive Plan.

§1101 Nonconforming Lots

The following regulations shall apply to all nonconforming lots, as defined by this Ordinance, in any zoning district:

A. Where two (2) or more adjacent lots of record with continuous frontage have less than the required area and width and are held by one (1) owner, the lots shall be considered to be an undivided lot for the purpose of complying with this Article. No division of any lot shall be made which does not comply with the requirements of this Article. Any change in lot lines necessary to meet the minimum requirements of this Article shall constitute a revision to the recorded plan and shall meet all applicable requirements of the Subdivision and Land Development Ordinance;

B. Any lot of record existing at the effective date of this Ordinance and held in separate ownership different from the ownership of adjoining lots shall be developed in accordance with the requirements of the zoning district of the lot of record;

C. Any nonconforming lot of record existing at the effective date of this Ordinance and then held in separate ownership different from the ownership of adjoining lots shall be exempt from the minimum lot area, depth and width requirements provided they are used in accordance with minimum yard requirements, and that uses other than a one family house conform to minimum lot area per family and floor area ratio requirements of this Ordinance;

D. Where structures exist on adjacent nonconforming lots of record which have front yards less than the minimum depth required, the minimum front yard for an adjacent undeveloped nonconforming lot of record shall be the average depth of the nonconforming front yards of the adjacent developed nonconforming lots which are in the same block on the same side of the street and in the same recorded plan as the undeveloped lot. All accessory structures shall be located in compliance with provisions of this Ordinance;

E. A "Certificate of Nonconformity" must be obtained by the owner of any nonconforming Lot as evidence that the Lot lawfully existed prior to the adoption of the provision which made the Lot nonconforming.

§1102 Nonconforming Structures

A. The following provisions shall apply to all nonconforming structures, as defined by this Ordinance, in all zoning districts:

1) Continuation - A nonconforming structure may be sold or otherwise transferred

DRAFT

to other owners and the nonconforming status may be continued;

2) Structural alteration - No such structure shall be enlarged or structurally altered in a way that increases its nonconformity, including off-street parking;

3) Damage and destruction - Any nonconforming structure which has been partially or completely damaged or destroyed by fire, other accident or act of God may be rebuilt or repaired on its existing foundation even though such foundation may violate the setback requirements of the zoning district in which the structure is located when permitted as a special exception by the Zoning Hearing Board, provided that the repair, reconstruction and re-occupancy of the structure is initiated and completed within one (1) year of the date of such causality, and if the restored structure has no greater coverage and contains no greater cubic content than before such casualty;

4) Moving - Should a nonconforming structure be moved for any reason for any distance, it shall thereafter conform to the requirements of the zoning district in which it is located;

5) Where nonconforming status applies to both the use and structure on the lot, removal or destruction of the nonconforming structure shall eliminate the nonconforming use on the lot;

6) A nonconforming structure used or occupied by a permitted use may be enlarged or expanded when permitted as a special exception by the Zoning Hearing Board if the expansion, considered independently of the original structure, complies with this section, §408.B and the off-street parking requirements in Article IX, Off-Street Parking and Loading; and such expansion otherwise conforms to all requirements of this Ordinance;

7) A nonconforming single-family residential structure, which is not in compliance with this Ordinance solely for the reason of an inadequate rear or side yard dimension, and provided that the nonconforming structure is used or occupied by a permitted use and located in a S or R Zoning District, may be enlarged or expanded with the approval of the Zoning Officer, provided that, the side or rear yard distance of the proposed expansion to the structure is not less than the side or rear yard distance of the existing nonconforming structure, used or occupied by a permitted use and located in any S or R Zoning District. The structure may be enlarged or expanded when permitted by variance of the Zoning Hearing Board, if the expansion, considered independent of the original structure, complies with the regulations in Article IX, Off-Street Parking and Loading, and such expansion otherwise conforms to all requirements of this Ordinance;

8) When any nonconforming use or structure located in a floodplain is expanded, reconstructed or otherwise modified to an extent amounting to fifty percent (50%) or less of its market value, it shall be floodproofed and elevated to the greatest extent practicable;

9) No nonconforming use or structure located in a floodplain shall be expanded, reconstructed or otherwise modified to an extent amounting to more than fifty percent (50%) of its market value except in full compliance with the flood proofing standards of this Ordinance;

DRAFT

10) No nonconforming use or structure located in a floodway shall be expanded or enlarged unless the effect of the proposed expansion or enlargement on flood heights is fully offset by accompanying improvements; and

11) A "Certificate of nonconformity" must be obtained by the owner of any nonconforming Structure as evidence that the Structure lawfully existed prior to the adoption of the provision which made the Structure nonconforming.

B. Signs

1) Nonconforming signs may be repaired or reconstructed, provided that no structural alterations are made which increase the gross surface area of the sign; however, nonconforming signs which are damaged or destroyed to an extent of more than fifty percent (50%) of its replacement cost at the time of destruction shall not be reconstructed except in conformity with the provision of this Article;

2) Signs which are nonconforming because of flashing lights or intermittent illumination shall be brought into compliance within thirty days of the effective date of this Ordinance;

3) Nonconforming signs may not be enlarged, added to or replaced by another nonconforming sign, use or structure;

4) A nonconforming sign of any type shall not be moved to another position or location upon the building, structure or lot on which it is located, nor shall the size or area of such nonconforming sign be changed, or its structure or construction changed; and

5) Discontinuance: If use of a Nonconforming Sign is discontinued for a continuous period of more than one (1) year, then such Nonconforming Sign together with its panel cabinet, supports, braces, anchors, and electrical equipment shall be removed within fourteen (14) days from the end of the aforesaid one (1) year period and the use of such Sign shall not be resumed except in accordance with the provisions of this chapter.

§1103 Nonconforming Uses

The following provisions shall apply to all nonconforming uses:

A. Continuation and change - A nonconforming use may be sold or otherwise transferred to other owners and may be continued, but shall not be changed in use unless to a conforming use.

B. Enlargement or expansion.

1) A nonconforming use may be expanded or enlarged upon approval as a special exception by the Zoning Hearing Board and subject to the general criteria set forth in §1211; and compliance with the following criteria:
   a) The extension becomes an attached part of the main structure and does not utilize additional or adjoining land area other than the original parcel;

   b) The new use will more closely correspond to the uses permitted in the

DRAFT

District;

c) The changed use will be in keeping with the character of the neighborhood in which it is located;

d) The extension does not encroach upon the lot area requirements and the maximum building height and other dimensional requirements of the zoning district in which the nonconforming use is presently located;

e) The extension is for the purpose of expanding the nonconforming use in existence at the time of the adoption of this Ordinance or amendment thereto which caused the use to become nonconforming;

f) Such extension does not result in an increase in total floor area or lot use area of more than fifty percent (50%) of the floor area or lot area as the same existed at the time of adoption of this Ordinance or amendment thereto which caused the use to become nonconforming;

g) Off-street parking, as required in Article IX, Off-Street Parking and Loading, shall be provided as to the enlarged portion; and

h) Such expansion does not present a threat to the health or safety of the community or its residents.

2) This subsection shall not apply to signs. Refer to §1102.A.6

a) Damage and Reconstruction - Any structure housing a nonconforming use damaged by fire, flood, explosion or other casualty to an extent of no more than fifty percent (50%) of the replacement value at the time of such casualty may be reconstructed and used as before when permitted as a special exception by the Zoning Hearing Board, if such reconstruction is performed within twelve (12) months of such casualty, and if the restored structure has no greater coverage and contains no greater cubic content than before such casualty;

b) Abandonment - In the event that any nonconforming use conducted in a structure or on a lot is abandoned for a period of twelve (12) consecutive months or longer, such nonconforming use shall be deemed to be abandoned and shall not be resumed. Once the nonconforming use is abandoned, the building or structure and/or lot shall not be used except in conformance with the regulations of the zoning district in which it is located.

3) A "Certificate of nonconformity" must be obtained by the owner of any nonconforming Use as evidence that the Use lawfully existed prior to the adoption of the provision which made the Use nonconforming.

§1104 Continuation

A. Subject to the provisions of this Article, a nonconforming lot, nonconforming structure or nonconforming use may be continued even though such does not conform to the provisions of these regulations for the district in which it is located. The Zoning Officer shall keep and maintain a list of all nonconforming lots, structures or uses existing at the time of the passage of this Ordinance, its predecessors or amendments thereto,

DRAFT

and which may come to exist in the future;

B. A "Certificate of Nonconformity" must be obtained by the owner of any nonconforming use as evidence that the use lawfully existed prior to the adoption of the provision which made the use nonconforming; and

C. A nonconforming use may be continued, however, it shall not be extended, expanded, or changed unless to a conforming use, except when permitted as a special exception by the Zoning Hearing Board in accordance with the following:

1) The new use will more closely correspond to the uses permitted in the District; and

2) The changed use will be in keeping with the character of the neighborhood in which it is located.

§1105 Abandonment or Discontinuance of Nonconforming Uses

A. In the event that any nonconforming use or a Building or Structure containing a nonconforming use, in or on the land, or within a Building or Structure or portion thereof, is abandoned or ceases, such nonconforming use shall not be resumed. A nonconforming use shall be presumed abandoned when one of the following conditions exists:

1) When the characteristic equipment and furnishings of the nonconforming use have been removed from the Premises and have not been replaced by similar equipment within one (1) year unless other facts show intention to resume the nonconforming use;

2) When a nonconforming use has been discontinued for a period of one (1) year;

3) When a nonconforming use has been replaced by a conforming use; and

4) When a nonconforming use has been changed in accordance with this part.

B. Any subsequent Use thereof shall conform to the applicable provisions of this chapter or its amendments and the prior Nonconforming use shall not be resumed, unless in accordance with the applicable provisions of this chapter or its amendments;

C. Nothing in this part shall prevent the strengthening or restoring to a safe condition of any portion of a Building that is declared unsafe by a proper authority;

D. Nothing in this part shall be interpreted as authorization for the continuation of the illegal use of a Structure or Premises or construction of a Structure or Building in violation of zoning regulations in existence at the time of enactment of this Part; and

E. Nonconforming Accessory Uses and Structures. No Use, Structure or Sign that is accessory to a principal nonconforming use shall continue after such Principal Use or Structure has been abandoned or removed, unless it shall thereafter conform to all the regulations of the zoning district in which it is located.

DRAFT

~ END OF SECTION ~

DRAFT

THIS PAGE INTENTIONALLY LEFT BLANK

DRAFT

§1201 Membership

The Zoning Hearing Board (Board) shall consist of either three (3) or five (5) residents of the Municipality, who shall be appointed by Council in a manner prescribed by the Municipality's Home Rule Charter. The term of office for a three (3) member Board shall be three (3) years and shall be so fixed that the term of office of one (1) member shall expire each year. The terms of office of a five (5)-member Board shall be five (5) years and shall be so fixed that the term of office of one (1) member of a five (5)-member Board shall expire each year. Members of the Board shall hold no other elective or appointed office of the Municipality or be an employee of the Municipality.

§1202 Applicability of the Municipalities Planning Code

All provisions of the Municipalities Planning Code (MPC) (Act of 1968, P.L. 805, No. 247 as reenacted and amended), as now or hereafter amended, reenacted or applied including, but not limited to, the conduct of hearings and the making of decisions, shall be applicable to the Zoning Hearing Board. When there are conflicts or inconsistencies between this Ordinance and the Municipalities Planning Code (MPC), the more stringent regulations shall apply.

§1203 Removal of Members

Any Board member may be removed for malfeasance, misfeasance or nonfeasance in office or for other just cause, by a majority vote of Council, taken after the member has received fifteen (15) days' advance notice of the intent to take such a vote. A hearing shall be held in connection with the vote if the member shall request it in writing.

§1204 Organization of the Board

A. The Board shall elect from its own membership its officers (Chairman, Vice Chairman and Secretary) who shall serve annual terms as such and may succeed themselves. For the conduct of any hearing and the taking of any action, a quorum shall not be less than a majority of all members of the Board, but the Board may appoint a hearing officer from its own membership to conduct any hearing on its behalf and the parties may waive further action by the applicant as provided in §1206;

B. The Board may make, alter, and rescind rules and forms for its procedure, consistent with ordinances of the municipality and laws of the Commonwealth of Pennsylvania. The Board shall keep full public records of its business, in which records shall be the property of the municipality, and shall submit a report of its activities to Council as requested by Council; and

C. The Board shall promptly notify Council of any vacancies which occur. Appointments to fill vacancies shall be only for the unexpired portion of the term. Members of the Board shall hold no other elected or appointed office in the Municipality nor shall any member be an employee of the Municipality.

§1205 Expenditures for Services

Within the limits of funds appropriated by Council, the Board may employ or contract for secretaries, clerks, legal counsel, consultants and other technical and clerical services. Members of the Board may receive compensation for the performance of their duties, as may be fixed by Council, but in no case shall it exceed the rate of compensation authorized to be paid to the members of Council.

DRAFT

§1206 Hearings

The Zoning Hearing Board shall conduct hearings and make decisions in accordance with the following requirements:

A. Public notice shall be given and written notice shall be given to the applicant, the Zoning Officer, such other persons as Council shall designate by ordinance and to any person who has made timely request for the same. Written notices shall be given at such time and in such manner as shall be prescribed by ordinance or, in the absence of ordinance provision, by rules of the Board. In addition to the written notice provided herein, written notice of said hearing shall be conspicuously posted on the affected tract of land at least one (1) week prior to the hearing;

B. Council may prescribe reasonable fees with respect to hearings before the Board. Fees for said hearings may include compensation for the secretary and members of the Board, notice and advertising costs and necessary administrative overhead connected with the hearing. The costs, however, shall not include legal expenses of the Board, expenses for engineering, architectural or other technical consultants or expert witness costs;

C. The first hearing before the Board or hearing officer shall be commenced within sixty (60) days from the date of receipt of the applicant's administratively complete application, unless the applicant has agreed in writing to an extension of time. Each subsequent hearing before the Board or hearing officer shall be held within forty-five (45) days of the prior hearing, unless otherwise agreed to by the applicant in writing or on the record. An applicant shall complete the presentation of his case-in-chief within one hundred (100) days of the first hearing. Upon the request of the applicant, the Board or hearing officer shall assure that the applicant receives at least seven (7) hours of hearings within the one hundred (100) days, including the first hearing. Persons opposed to the application shall complete the presentation of their opposition to the application within one hundred (100) days of the first hearing held after the completion of the applicant's case-in-chief. An applicant may, upon request, be granted additional hearings to complete his case-in-chief provided the persons opposed to the application are granted an equal number of additional hearings. Persons opposed to the application may, upon the written consent or consent on the record by the applicant and Municipality, be granted additional hearings to complete their opposition to the application provided the applicant is granted an equal number of additional hearings for rebuttal;

D. The hearings shall be conducted by the Board, or the Board may appoint any member or an independent attorney as a hearing officer. The decision, or, where no decision is called for, the findings, shall be made by the Board; however, the appellant or the applicant, as the case may be, in addition to the Municipality, may, prior to the decision of the hearing, waive decision or findings by the Board and accept the decision or findings of the hearing officer as final;

E. The parties to the hearing shall be the Municipality, any person affected by the application who has made timely appearance of record before the Board, and any other person including civic or community organizations permitted to appear by the Board. The Board shall have power to require that all persons who wish to be considered parties enter appearances in writing on forms provided by the Board for that purpose;

DRAFT

F. The chairman or acting chairman of the Board or the hearing officer presiding shall have power to administer oaths and issue subpoenas to compel the attendance of witnesses and the production of relevant documents and papers, including witnesses and documents requested by the parties;

G. The parties shall have the right to be represented by counsel and shall be afforded the opportunity to respond and present evidence and argument and cross-examine adverse witnesses on all relevant issues;

H. Formal rules of evidence shall not apply, but irrelevant, immaterial, or unduly repetitious evidence may be excluded;

I. The Zoning Hearing Board or the hearing officer, as the case may be, shall keep a stenographic record of the proceedings. The appearance fee for a stenographer shall be shared equally by the applicant and the Board. The cost of the original transcript shall be paid by the Board if the transcript is ordered by the Board or hearing officer or shall be paid by the person appealing from the decision of the Board if such appeal is made, and in either event the cost of additional copies shall be paid by the person requesting such copy or copies. In other cases, the party requesting the original transcript shall bear the cost thereof; and

J. The Zoning Hearing Board or the hearing officer shall not communicate, directly or indirectly, with any party or his representatives in connection with any issue involved except upon notice and opportunity for all parties to participate, shall not take notice of any communication, reports, staff memoranda, or other materials, except advice from their solicitor, unless the parties are afforded an opportunity to contest the material so noticed and shall not inspect the site or its surroundings after the commencement of hearings with any party or his representative unless all parties are given an opportunity to be present.

§1207 Zoning Hearing Board Decisions

A. The Zoning Hearing Board or the hearing officer, as the case may be, shall render a written decision, or when no decision is called for, make written findings on the application within forty-five (45) days after the last hearing before the Board or hearing officer. Where the application is contested or denied, each decision shall be accompanied by findings of fact and conclusions based thereon together with the reasons therefore. Conclusions based on any provisions of the MPC, or of any Municipal ordinance, rule or regulation shall contain a reference to the provision relied on and the reasons why the conclusion is deemed appropriate in the light of the facts found. If the hearing is conducted by a hearing officer and there has been no stipulation that his decision or findings are final, the Zoning Hearing Board shall make his report and recommendations available to the parties within forty-five (45) days and the parties shall be entitled to make written representations thereon to the Board prior to final decision or entry of findings, and the Board's decision shall be entered no later than thirty (30) days after the decision of the hearing officer. Except for challenges filed under section 916.1 of the MPC, where the Board fails to render the decision within the period required by this subsection or fails to commence, conduct or complete the required hearing within sixty (60) days from the date of the applicant's request for hearing, the decision shall be deemed to have been rendered in favor of the applicant unless the applicant has agreed in writing or on the record to an extension of time. When a decision has been rendered in favor of the applicant because of the failure of the Board to meet or render a decision as hereinabove provided, the Board shall give public notice of said decision within ten (10) days from the last day it could have met to render a decision in the same manner as provided in

DRAFT

§1206.A. If the Board shall fail to provide such notice, the applicant may do so. Nothing in this subsection shall prejudice the right of any party opposing the application to appeal the decision to a court of competent jurisdiction;

B. A copy of the final decision or, where no decision is called for, of the findings shall be delivered to the applicant personally or mailed to him not later than the day following its date of issue. To all other persons who have filed their name and address with the Zoning Hearing Board not later than the last day of the hearing, the Board shall provide by mail or otherwise, brief notice of the decision or findings and a statement of the place at which the full decision or findings may be examined.

§1208 Jurisdiction

The Zoning Hearing Board shall have exclusive jurisdiction to hear and render final adjudication in the following matters:

A. Substantive challenges to the validity of any land use ordinance, except those challenges brought before Council pursuant to Sections 609.1 and 916.1a)2) of the MPC;

B. Appeals from the determination by the Zoning Officer, including, but not limited to, the granting or denial of any permit, or failure to act on the application therefore, the issuance of any cease and desist order, enforcement notice or the registration or refusal to register any nonconforming use, structure or lot;

C. Appeals from a determination by the Municipal Engineer or Zoning Officer, with reference to the administration of Article IV, Overlay Districts;

D. Applications for variances from the terms of this Zoning Ordinance, pursuant to §1209;

E. Appeals from the Zoning Officer's preliminary opinion determination as authorized by Section 916.2 of the MPC;

F. Applications for Special Exceptions under this Ordinance, pursuant to §1211; and

G. Applications for the enlargement or expansion of a legally existing nonconforming structure or use.

§1209 Variances

A. Application - The Zoning Hearing Board shall hear requests for variances where it is alleged that the strict application of the provisions of this Ordinance inflicts unnecessary hardship upon the applicant. Application for a variance shall be made in writing on the prescribed form obtained from the Zoning Officer. The Zoning Officer shall forward the application to the Zoning Hearing Board, which shall determine a time and place of the hearing;

B. Use Variances. Use Variance shall mean the authorization by the Zoning Hearing Board for the use of land for a purpose that is otherwise not allowed or is prohibited by the applicable zoning regulations. A Use Variance is approved subject to specific plans, terms and conditions. Modification of such plans, terms and conditions shall require approval by the Zoning Hearing Board. The Zoning Hearing Board shall have the authority to grant Use Variances to restore Structures damaged or destroyed or establish a use of greater intensity;

DRAFT

C. Area Variances. Area Variance shall mean the authorization by the Zoning Hearing Board for the use of land in a manner that is not permitted by regulations of this Chapter related to:

1) A dimension, such as size, height and setbacks;

2) Physical requirements of this Chapter;

3) The expansion, structural Alteration or Enlargement of a legally existing nonconforming use;

4) The waiver of the Additional Requirements for Specified Uses for permitted Uses; and

5) Any Design Standard.

D. Standards for Variances - The Board may grant a variance, provided that all of the following findings are made where relevant in a given case:

1) That there are unique physical circumstances or conditions, including irregularity, narrowness or shallowness of lot size or shape or exceptional topographical or other physical conditions peculiar to the particular property and that the unnecessary hardship is due to such conditions and not the circumstances or conditions generally created by provisions of this Ordinance in the neighborhood or district in which the property is located;

2) That, because of such physical circumstances or conditions, there is no possibility that the property can be developed in strict conformity with the provisions of this Ordinance and that authorization of a variance is therefore necessary to enable the reasonable use of property;

3) That such unnecessary hardship has not been created by the applicant;

4) That the variance, if authorized, will not alter the essential character of the neighborhood or district in which the property is located nor substantially or permanently impair the appropriate use or development of adjacent property nor be detrimental to the public welfare; and

5) That the variance, if authorized, will represent the minimum variance, which would afford relief and represent the least modification possible of the regulation in issue.

E. In granting any variance, the Board may attach such reasonable conditions and safeguards, as it may deem necessary to implement the purposes of the MPC and this Ordinance.

§1210 Appeal of Zoning Officer's Determination

Appeals arising from the Zoning Officer's determination on a specific provision of this Ordinance shall be handled in the same manner as a variance request.

§1211 Special Exceptions

DRAFT

A. For granting of a use by special exception, the applicant shall file a written request with the Zoning Officer on forms prescribed by the Municipality, along with all plans, texts and reports, which may be necessary to explain the proposed development and its conformance to the standards and criteria of this Ordinance. The request shall be accompanied by a fee specified by Council;

B. Where Council, in this zoning ordinance, has stated special exceptions to be granted or denied by the Zoning Hearing Board pursuant to express standards and criteria, the Zoning Hearing Board shall hear and decide requests for such special exceptions in accordance with such standards and criteria enumerated herein. In granting a special exception, the Zoning Hearing Board may attach such reasonable conditions and safeguards as it may deem necessary to implement the purpose of the MPC and this Ordinance:

1) The use will not endanger the public health, safety or welfare if located where proposed and will not deteriorate the environment or generate nuisance conditions;

2) The use can be accommodated on the site with no variances required;

3) The use is compatible with or will support the uses in the neighborhood of the site;

4) The use does not require extensive earth moving or revision of drainage patterns or create substantial increase in storm water flow;

5) The use will not create excessive traffic congestion and adequate off-street parking shall be provided on the same property as the use;

6) Areas of the property not covered by buildings or impervious surface, shall be landscaped and maintained;

7) In considering applications for special exceptions and variances in floodplain districts the Board shall give due consideration to the danger to life and property due to increased flood heights or velocities caused by encroachment. No special exception or variance shall be granted for any proposed use, development, or activity within the floodway that will cause any increase in flood levels during the one hundred (100) year flood

8) The Board may attach such reasonable conditions and safeguards as it may deem necessary to implement the purposes of this Ordinance and of the MPC.

C. Following the grant of a special exception, the use shall be established within one (1) year of the approval date or the special exception approval shall automatically lapse.

In addition to the general criteria in §1211 B, the following specific criteria shall be met for the following specific uses:

1) Apiaries shall be an accessory structure, subject to the following provisions:

a) Apiaries may be located within all zoning districts;

b) No Beekeeper may own or maintain an apiary within the Municipality without first registering all apiaries with the Pennsylvania Department of

DRAFT

Agriculture, Bureau of Plant Industry as required by the Pennsylvania Bee Law, 3 Pa. Cons. Stat. Ann. §2101 et. Seq., as amended;

c) No Beekeeper may own or maintain an apiary within the Municipality without first providing proof of a Beekeeping 101 courses or equivalent taught by a county beekeeping organization, master beekeeper, university or farm/business associated with beekeeping;

d) A Beekeeper owning or maintaining an apiary in the Municipality shall submit a signed copy of the Department's best management practices related to the keeping of honey bees along with their application. The agreement must also be on file with the Department in Harrisburg. A beekeeper owning or maintaining an apiary in the Municipality shall promptly notify the Municipality Zoning Officer without unnecessary delay, and in no event longer than forty-eight (48) hours, if the Department revokes said beekeeper's best management certification;

e) Non-property owners that wish to own or maintain an apiary on property that the non-property owner is renting must include written permission from the property owner or landlord that explicitly indicates that the non-property owner has permission to own or maintain an apiary on the subject property. Such written permission shall be supplied to the Municipality as part of the annual bee keeping permit application;

f) The maximum number of honey bee hives for properties with a minimum of seven thousand-five hundred (7,500) square feet of lot area; a beekeeper is permitted to keep four (4) hives. For every additional two-thousand (2,000) square feet of lot area, the beekeeper is permitted two (2) additional hives;

g) No beekeeper shall keep or maintain bees in any hive other than a modern movable frame hive which permits thorough examination of every comb to determine the presence of bee disease;

h) Hives shall not be located within ten (20) feet of any side or rear property line;

i) Hives shall not be located within a front yard;

j) Hives shall not be located within fifty (50) feet of a swimming pool or permanently kenneled animal;

k) Hive entrances shall face away from neighboring property and in such a direction that bees fly across the beekeeper's property at sufficient distance to gain a height of at least six feet at the property line. The use of barriers may be employed to redirect the bees' flight pathway and establish bee flight pathways above six (6) feet. Should the flight path not be able to be obtained as described above, then a "flyway barrier" shall be placed at least four (4) feet in height, shall be placed along the side of the hive(s) that contains the entrance to the hive(s), shall be located within five (5) feet of the hive(s), and shall extend at least two (2) feet on either side of the hive(s). A "flyway barrier" shall consist of a fence, permanent vegetation, hedge, or combination thereof that provides for suitable flight path of bees as described above. No flyway

DRAFT

is required for hives that are located on porches or balconies at least ten (10) feet above grade, except where such porch or balcony is located less than five (5) feet from a property line; and

l) All beekeepers in the Municipality shall ensure that a convenient source of fresh water is available to the bees from April 1 through November 1 each year and is located closer to the apiary than any other water source.

2) Bed and Breakfast - A Bed and Breakfast operation may be approved under the provisions of this Ordinance if, and only if, it is found to meet the following criteria:

a) The structure shall be owner occupied, and the Bed and Breakfast must be accessory and clearly secondary to the use of the home as a residential dwelling and must satisfy the following requirements:

i. The Bed and Breakfast shall be operated by the owner residing permanently in the residential structure;

ii. The minimum lot area required shall be 10,000 square feet;

iii. Guest shall be accommodated for no longer than seven (7) consecutive days;

iv. No meals, other than breakfast, shall be served on the premises. Food may be prepared on the premises for consumption off the premises by overnight guests. Food shall not be served to any customers who are not overnight guests;

v. No more than three (3) sleeping rooms may be used for such purposes;

vi. No alteration to the exterior of the residential dwelling, accessory structure, or yard that alters the residential character of the premises is permissible;

vii. No more than two (2) guests shall be permitted to a room;

viii. The Bed and Breakfast Establishment shall obtain and maintain licenses from the applicable State and County agencies;

ix. An annual permit and fee from the Municipality shall be required for the inspection of the Bed and Breakfast Establishment to ensure compliance with all building and fire codes; NEED TO CREATE A PERMIT

x. Sufficient off-street parking shall be provided in addition to that required by this ordinance for single-family residences for residential purposes, at the rate of one (1) space per double-occupied room;

xi. The Bed and Breakfast shall not generate pedestrian or vehicular traffic beyond that normally generated by homes in the residential neighborhood;

DRAFT

xii. The home shall not be used by the public or paying guests for the hosting of receptions, private parties or the like; and

xiii. Signage shall be limited to one (1) non-illuminated wall-mounted sign not to exceed one and one half (1 ½) square feet in area.

3) Carport

a) The proposed carport is not to be located within any required yard setback;

b) Not more than one (1) story or fourteen (14) feet in height and twenty-four (24) feet in length;

c) Entirely open on at least three (3) sides, except for the necessary supporting columns and customary architectural features;

d) Temporary carports are not permitted. All carports must meet Pennsylvania Uniform Construction Code (PA UCC) requirements.

e) The Carport will not impede the normal and orderly development and improvement of surrounding property for uses permitted in that district; and

f) Any illumination or drainage shall be contained on site and directed away from abutting properties.

4) Chickens (Fowl Management to include, but not limited to: peacocks, peahens, guinea hens, ducks, geese ……etc..)

a) The raising of fowl shall be permitted, provided that:

i. A permit application is obtained from the Department of Community Development. A pre-construction inspection is required to be conducted by the zoning officer prior to the issuance of a permit to house chickens.

ii. A permit may be revoked for failure to comply with provisions of this section and once revoked, shall not be reissued;

b) A chicken run and or coop shall be defined as an accessory structure, subject to the following provisions:

i. One (1) coop and or chicken run shall be permitted in the rear yard of a residence in the R-1, R-2 or S zoning districts. Applications will not be accepted for commercial, industrial or multi-family zoning districts;

ii. Chicken coops shall be constructed in a workmanlike manner, be moisture resistant and either raised off the ground or placed on a hard surface such as concrete, patio block, stone or gravel;

DRAFT

iii. Chicken coops and runs shall be constructed so they will not have standing water;

iv. Coops shall be enclosed on all sides, and shall have a roof and doors. Access doors must be able to be shut and locked at night. Openings, windows, and vents must be covered with vermin, predator and bird-proof wire of one-half (1/2) inch hardware cloth;

v. Materials used for making a coop shall be uniform for each element of the enclosure such that the walls are made of the same material, the roof has the same shingles or other covering and any windows or opening are constructed using the same materials. The use of scrap, waste board, or similar material is prohibited;

vi. The chicken run shall be adequately fenced to contain the chickens on the property and to prevent predators from gaining access to the chicken run. The chicken run must have a wire roof to prevent the chickens from flying out of the run, or all chickens must have their wings clipped;

vii. Coops and chicken runs must reasonably prevent the chickens from running at large. Chickens will be considered running at large within the meaning of this Section when off the owner's premises;

viii. Chicken coops and runs together shall be large enough to provide at least sixteen (16) square feet per chicken. Fence enclosure space can be added to the coop space to add to the minimum number of square feet. Coops or runs cannot be taller than ten (10) feet or exceed sixty-four (64) square feet in size;

ix. Chicken coops and runs shall not be closer than twenty-five (25) feet to any residential structure on an adjacent lot. Enclosures shall not be located in the front yard area;

x. Chickens may be kept and used only for personal, family and household use. No person shall sell chicken eggs; engage in chicken breeding or fertilizer production for commercial purpose;

xi. No property owner shall be permitted to have not more than four (4) chickens at any one time on a lot area. Each chicken shall be the age of one (1) month or older;

xii. No property owner shall keep any ducks, geese, peacocks, or peahens or other type of fowl or bird that may be inclined to make loud, raucous noises within one thousand (1000) feet of any occupied residential building other than the residence of the owner of such fowl; and

DRAFT

xiii. Non-property owners that wish to construct and maintain a chicken run or coop on property that the non-property owner is renting must include written permission from the property owner or landlord that explicitly indicates that the non-property owner has permission to construct and maintain a chicken run and or coop on the subject property. Such written permission shall be supplied to the Municipality as part of the permit application process;

c) Care of Chickens:

i. Chickens shall be provided with shelter, fresh water at all times and adequate amounts of feed;

ii. Chickens shall be provided with a sanitary and adequately-sized covered enclosure or coop and shall be kept in the enclosure or a sanitary, adequately-sized, and fenced enclosure at all times. Chicken coops and enclosures may not be single-family residential structures or garages;

iii. Coops and chicken runs shall be kept in good repair and must be capable of being maintained in a clean and sanitary condition, free of vermin and obnoxious odors;

iv. Waste Storing and Removal. Every keeper of any chicken shall cause the litter and droppings therefrom to be collected daily in a container or receptacle that when closed shall be rat-proof and fly-tight, and after every such collection shall cause such container or receptacle to be kept closed. At least once a week, every such keeper shall cause all litter and droppings so collected to be disposed of in such manner as not to permit the presence of fly larvae. Coops and outside runs shall be cleaned of hen droppings, uneaten feed, feathers and other waste;

v. Composting. It shall be unlawful for any person to spread or cause to be spread or deposited upon any ground or premises within the Municipality any chicken manure. However, chicken manure may be composted in an approved, enclosed container on the property where chickens are housed and the composted material then applied to gardens and yards;

vi. Chickens shall not cause any nuisance, unhealthy condition, public health threat or otherwise interfere with the normal use of property; and

vii. Unusual illness or death of chickens shall be reported to the Allegheny County Health Department.

d) Inspections:

i. The Municipal Zoning/Code Enforcement Officer or Animal Control Officer shall have free access, ingress, and egress to and from any coop, public or private, in which fowl are kept. No

DRAFT

person shall deny any such access, hinder, or resist an inspection.

e) Prohibitions:

i. Roosters are prohibited;

ii. Slaughtering of fowl is prohibited.

5) Dependent Dwelling

a) Dependent Dwellings shall not be located on lots of less than 7,200 square feet;

b) Dependent Dwellings shall only be permitted as an Accessory Structure;

c) The Structure is not to be placed within any Front Yard;

d) Dependent Dwellings shall be limited to 2 Stories or 25';

e) Each story is limited to 625 square feet, but not less than 400 sf;

f) Dependent Dwellings shall contain no more than one bedroom;

g) Dependent Dwellings may be erected within the required side or rear yards, provided that such an accessory structure is not located closer than 20 feet to the rear lot line or 10 feet to the side lot line; and

h) If a Dependent Dwelling is attached to the principal structure, then it shall be considered part of the principal structure and shall be subject to all requirements relating to the principal structure. Detached accessory structures shall maintain a separation of at least 10 feet from the principal structure.

6) Enlargement or Expansion of a Nonconforming Structure. An enlargement or expansion of a nonconforming structure may be approved under the provisions of this Ordinance if, and only if, it complies with §1102.

7) Enlargement or Expansion of a Nonconforming Use. An enlargement or expansion of a nonconforming use may be approved under the provisions of this Ordinance if, and only if, it complies with §1103.

8) Ham Radio

a) A Ham Radio Antenna shall only be permitted as an accessory structure to a single-family residential structure or an agricultural operation in the R-1 or R-2 Districts;

b) The height of any antenna or the combined height of an antenna and antenna structure shall not exceed a maximum height of 35 feet including any extension. If an antenna is installed on the roof of the building, the height of the antenna shall be inclusive of the building height;

c) Antennas and their support structures are limited to Side and Rear Yards;

DRAFT

d) A maximum of one amateur "HAM" radio antenna may be permitted on each building site;

e) Antennas must be a distance from the property line that is equal to one and one-half times its height;

f) No signs or lights shall be mounted on an antennas and their supporting structures except for any warning signs required by the Uniform Construction Code or other applicable governmental agencies;

g) All antennas and their supporting structures shall be maintained in good condition including repainting when necessary; and

h) The use of highly reflective material shall be prohibited.

9) Home Occupation, No Impact

a) No-Impact Home-Based Businesses shall satisfy the following requirements:

i. The business activity shall be compatible with the residential use of the property and surrounding residential uses;

ii. Applicant shall obtain a Business License through the Monroeville Tax Office;

iii. The use shall not require internal or external alterations or construction features which are not customary to a dwelling or which change the fire rating of the structure;

iv. The business shall employ no employees other than family members residing in the dwelling;

v. There shall be no display or sale of retail goods and no stockpiling of inventory of a substantial nature;

vi. There shall be no outside appearance of a business use, including, but not limited to, parking, signs or lights;

vii. Any home occupation where customers, clients or students routinely visit the premises shall provide a paved off-street parking area in accordance with the requirements of Article IX for the specific use in addition to the spaces required for the dwelling;

viii. There shall be no exterior displays or signs, either on or off the premises, other than a small identification sign no more than one square foot in surface area containing only the name of the resident and the nature of the home occupation, which may be attached to the wall of the dwelling or to the mailbox;

ix. The business activity may not use any equipment or process which creates noise, vibration, glare, fumes, odors or electrical or electronic interference, including interference with radio or television reception, which is detectable in the neighborhood;

DRAFT

x. The use shall not cause an increase in the use of water, sewage, electricity, garbage, public safety or any other municipal services beyond that which is normal for the residences in the neighborhood.;

xi. The use shall not significantly intensify vehicular or pedestrian traffic beyond that which is normal for the residences in the neighborhood;

xii. The business activity shall be conducted only within the dwelling unit and may not occupy more than twenty-five percent (25%) of the habitable floor area;

xiii. In the R-1, R-2 R-3 and R-4 Districts, the home occupation shall not involve the use of commercial vehicles for regular delivery of materials to or from the premises and commercial vehicles shall not be parked on the premises;

xiv. The business may not involve any illegal activity;

xv. The business activity must be conducted within the principal structure. In the R-1, R-2, R-3 and R-4 Districts, the home occupation shall be carried on wholly within the principal dwelling. The home occupation shall not be conducted in any accessory structure;

xvi. There shall be no storage of materials or equipment used in the home occupation outside a completely enclosed building;

b) The following uses shall **NOT** be considered home occupations and shall be restricted to the zoning districts in which they are specifically authorized as permitted uses, conditional uses or uses by special exception, including but not limited to:

i. Beauty shops or barbershops containing more than two chairs

ii. Blacksmith or metal working

iii. Boarding stables

iv. Clinics, hospitals or nursing homes

v. Funeral homes

vi. Group care facility, personal care boarding home or transitional dwelling

vii. Kennels, veterinary offices and clinics

viii. Private clubs

ix. Private instruction to more than five students at a time

DRAFT

x. Restaurants or tea rooms

xi. Retail or wholesale sales; flea markets

xii. Tanning or massage salon

xiii. Tourist or boarding home, other than bed-and-breakfast

xiv. Vehicle or equipment rental, repair or sales; vehicle repair garages

c) The following are examples of permitted home occupations, provided all of the foregoing criteria are met:

i. Artist, photographer or handicrafts studio

ii. Catering off the premises

iii. Child Day Care--up to and including three (3) children

iv. (Contracting business, excluding on-site storage of equipment

v. Computer programmer, data processor, writer

vi. Consultant, clergy, counselor, bookkeeping, graphics or drafting services

vii. Dressmaker, tailor

viii. Professional offices which involve routine visitation by customers or clients

ix. Housekeeping or custodial services

x. Interior designer

xi. Jewelry and/or watch repair, not including wholesale or retail sales

xii. Lawnmower and small engine repair in the “S” Conservancy District only

xiii. Locksmith

xiv. Mail order business

xv. Manufacturer's representative

xvi. Repair of small household appliances that can be hand carried, in the “S” Conservancy District only

xvii. Telemarketing

xviii. Travel agent

DRAFT

xix. Tutoring or any other instruction to no more than five students at any one time

xx. Word processing, typing, secretarial services

xvii. The acceptability of any proposed home occupation not specifically listed above shall be determined by the Zoning Hearing Board in accordance with the standards of this section.

10) Kennel

a) A minimum of one hundred (100) feet from all property lines shall be required for all outdoor pens, recreational areas, stalls or runways and such area shall be secured by a minimum six (6) foot high, opaque fence with a self-latching gate(s);

b) Outdoor animal runs may be provided for use between 8:00am and 8:00pm provided the runs are at least 100 feet from any residential dwelling and provided that the runs for dogs are separated from each other by visual barriers a minimum of four (4) feet in height, to minimize dog barking;

c) When all bordering activities are housed in a completely enclosed structure, the required setback may be reduced to a minimum of one hundred (100) feet from all property lines;

d) When the kennel is adjacent to residential zoning districts, the kennel shall be soundproofed to minimize noise impact on the adjacent properties;

e) Outbuildings, including those for storage of manure, odor or dust producing substance shall be located at least two hundred (200) feet from all property lines;

f) All mechanical equipment shall be screened from the view of adjoining properties;

g) All waste collection/storage areas shall be located at least fifty (50) feet from the nearest building and shall be enclosed by a solid masonry screen;

h) At no time shall the animals run at large within the property, other than in a completely enclosed area;

i) If the kennel is operated in conjunction with a single-family use in the S-Conservancy zoning district, the parking requirements for the single-family residential use must be met, (see Table 902);

j) A kennel is **NOT** a “No-Impact” Home Based Business; and

k) A kennel must be licensed by all appropriate governmental agencies. Said valid license and all appropriate documentation shall be submitted to the Municipality prior to the issuance of the occupancy certificate.

DRAFT

11) Restaurant

a) A traffic impact study shall be required;

b) No less than seventy-five percent (75%) of the floor area to which the customer has access shall be devoted to sit-down dining tables;

c) The business shall operate as a "bona-fide" restaurant at all times, i.e., it is required to serve a full menu during all hours of operation;

d) The restaurant use shall not cause any potential disruption or nuisance to surrounding uses or have a detrimental effect on surrounding property values;

e) There shall be no disruption to the surrounding business neighborhood;

f) The main structure, which contains the restaurant, shall have all approvals required by the Municipality;

g) The business shall comply with all applicable governmental regulations and laws;

h) All mechanical equipment shall be screened from the view of adjoining properties;

i) All waste collection/storage areas shall be located at least fifty (50) feet from the nearest building and shall be enclosed by a solid masonry screen;

j) When alcoholic beverages are served in the outdoor dining area, access must be provided exclusively internally through the establishment; and

k) The restaurant use shall not alter the essential character of the neighborhood or district in which the property is located, nor substantially or permanently impair the appropriate use or development of adjacent property, nor be detrimental to the public welfare.

12) Retail Sales / Store

a) The Retail Use shall be limited to 2,000 square feet and maximum height of twenty (20) feet.

b) Parking shall be provided according to the parking requirements of Article IX;

c) The Retail Use shall not be located closer that twenty (20) to the property line of a residential use;

d) The Retail Use shall not operate before 7:00 am or after 9:00 pm;

e) Any outdoor Waste area / dumpster area shall be screened by a solid fence not less than 6' in height;

DRAFT

f) The Retail Use shall have a continuous vegetative buffer comprised of evergreen plants of a height not less than six (6) feet when abutting a residential use;

g) The street level facade shall be transparent between the height of three (3) feet and eight (8) feet above the walkway grade for no less than sixty (60) percent of the horizontal length of the building façade;

h) Upper story windows of front facades shall not be boarded or covered;

i) Blank walls shall not be permitted along any exterior wall facing a street, parking area, or walking area. Walls or portions of walls where windows have not been provided shall have architectural treatments that are similar to the front façade, including materials, colors, and details;

j) Building types shall be compatible to the historic architecture of the area in their massing and external treatment;

k) Buildings shall attempt to maintain the horizontal rhythm adjacent facades by using a similar alignment of windows, floor spacing, cornices, awnings as well as other elements. This rhythm shall be achieved by aligning the top, middle, and base floors;

l) All primary structures shall provide a prominent and highly visible street level doorway or entrance on the facade of the building;

m) Continuous pedestrian sidewalks shall be provided along the main facade of building;

n) No facilities, equipment or materials which are dangerous or incompatible with the residential environment on the property shall be used;

o) All mechanical equipment shall be screened from the view of adjoining properties;

p) All waste collection/storage areas shall be located at least fifty (50) feet from the nearest building and shall be enclosed by a solid masonry screen;

q) The Retail Use shall not involve the storage of supplies, equipment, raw material or residue material outside of the structure or in any shed or outbuilding on the property; and

r) The Retail Use shall not alter the essential character of the neighborhood or district in which the property is located, nor substantially or permanently impair the appropriate use or development of adjacent property, nor be detrimental to the public welfare

13) Short-Term Rental

a) No more than one short-term rental unit may be located in a structure, and a short-term rental unit may not be located in a structure which also contains one or more dwelling units;

DRAFT

b) Short-term rental units shall be, at a minimum, 1,500 feet away from other Short-term rental units, unless otherwise approved by the planning commission;

c) All mechanical equipment shall be screened from the view of adjoining properties;

d) All waste collection/storage areas shall be located at least fifty (50) feet from the nearest building and shall be enclosed by a solid masonry screen;

e) An annual permit and fee from the Municipality shall be required for the inspection of the short-term rental establishment to ensure compliance with all building and fire codes;

f) The short-term rental unit shall provide a minimum of one parking space per bedroom of the dwelling unit;

g) The owner of the short-term rental shall demonstrate that the proposed short-term rental unit contains or meets all of the following:

i. Smoke detector in each bedroom

ii. Smoke detector outside each bedroom in the common hallway

iii. Smoke Detector on each floor

iv. GFI outlet required if outlet located within six feet of water source (all sinks, sump pumps, etc.)

v. Aluminum or metal exhaust from dryer (if a dryer is provided)

vi. Carbon monoxide detector if open flame furnace or gas fireplace

vii. Carbon monoxide detector if garage is attached

viii. Fire extinguisher in kitchen

ix. Stairs (indoor and outdoor) in good condition

x. Covers on all outlets

xi. If not served by a municipal water supply, the owner shall provide proof that a portable water supply is available for the unit

xii. If not served by a public sewer system, evidence that the sewer system is adequate to serve the maximum number of occupants of the short-term rental unit

xiii. Fully functioning bathing and toilet facilities

xiv. Fully functioning kitchen (if one has been installed)

xv. The Pennsylvania Uniform Construction Code as adopted by the township

DRAFT

(e) The owner of the short-term rental shall prepare and present to the Zoning Hearing Board a notice which shall be prominently and continuously posted at the short-term rental unit which shall contain all of the following information:

i. The name of the local contact person or owner of the short-term rental unit;

ii. The 911 address of the property;

iii. The maximum number of occupants permitted to stay in the short-term rental unit;

iv. The maximum number of all vehicles allowed to be parked on the property and the requirement that parking is not permitted in any public road right-of-way unless such designated right-of-way is not parking restricted;

v. Notification that trash and refuse shall not be left or stored on the exterior of the property except in secure, watertight metal or plastic cans or similar containers designed for such storage with a limit of secured containers;

vi. Notification that an occupant may be cited and fined for creating a disturbance or for violating other provisions of applicable Township Ordinances.

14) Sign, Directional (Off-Premise) - An Off-Premise Directional sign, directing vehicular and pedestrian traffic to a major shopping center, hospital, college or industrial facility may be located at or near the intersection of public streets as a special exception approved by the Zoning Hearing Board if:

a) Such sign(s) shall be limited to places of worship and those businesses having fifty (50) or more on-premise employees or groups of three (3) or more businesses having a common identification such as a college, hospital, industrial facility or shopping center;

b) Such sign(s) shall be no greater than four (4) feet in width by eight (8) inches in height and shall have white letters on a blue background;

c) No more than one (1) set of posts shall be installed on any approach to an intersection, and no more than six (6) directional signs shall be attached to each set of posts;

d) Appropriate permits from state, county or municipal authorities having roadway jurisdiction shall be obtained prior to the issuance of a municipal sign permit; and

e) Such signs located within any municipal Right of Way may be maintained or removed without compensation to the beneficial user by the Municipality of Monroeville.

15) Studio

DRAFT

a) The Retail Use shall be limited to 2,000 square feet and maximum height of twenty-five (25) feet;

b) Parking shall be provided according to the parking requirements of Article IX;

c) The Studio Use shall not be located closer that twenty (20) to the property line of a residential use;

d) The Studio Use shall have a continuous vegetative buffer comprised of evergreen plants of a height not less than six (6) feet when abutting a residential use;

e) The Studio Use shall not operate before 9:00 am or after 9:00 pm;

f) Number of Patrons shall be limited to eight (8);

g) Entrances to first floor shall provide a prominent and highly visible street level doorway or entrance on the facade of the building;

h) Applicant shall obtain a Business License through the Monroeville Tax Office;

i) No facilities, equipment or materials which are dangerous or incompatible with the residential environment on the property shall be used;

j) Nude models shall not be visible from outside of the building;

k) All mechanical equipment shall be screened from the view of adjoining properties;

l) All waste collection/storage areas shall be located at least fifty (50) feet from the nearest building and shall be enclosed by a solid masonry screen;

m) The Studio Use shall not involve the storage of supplies, equipment, raw material or residue material outside of the structure or in any shed or outbuilding on the property; and

n) The Studio Use shall not alter the essential character of the neighborhood or district in which the property is located, nor substantially or permanently impair the appropriate use or development of adjacent property, nor be detrimental to the public welfare.

16) Temporary Banner, Sign or Event Display - A Temporary banner, sign or event display may be approved under the provisions of this Ordinance if, and only if, it is found to meet the following criteria:

a) All temporary banners, signs and event displays shall comply with §1003.D, 1003.OO;

b) Any Municipality of Monroeville civic or community organization may erect a temporary sign within the Municipality, however, said organization must

DRAFT

file an application with the Municipality, except that said organization shall be exempt from the payment of the temporary sign fee.

17) Temporary Structure or Trailer:

a) Temporary structures and trailers used in conjunction with construction work may be permitted only during the period that the construction work is in progress. Permits for other temporary structures and trailers may be issued for sixty (60) day periods, but such permits shall not be renewed except as a special exception when approved by the Board; and

b) Permits for temporary structures and uses may be issued for no more than thirty (30) days in residentially zoned districts and sixty (60) days for all other zoning districts. No more than two (2) permits shall be issued in a calendar year and in no event shall a permit be issued for consecutive periods as applicable.

18) Windmill (Wind Energy Facility):

a) The minimum lot area for a windmill shall be (1) acre;

b) Only one (1) windmill shall be permitted per lot;

c) A windmill shall only be permitted as an accessory structure to a single-family residential structure or an agricultural operation in the R-1 or R-2 Districts;

d) The applicant shall demonstrate that it has received all necessary federal, state and county licenses, permits and approvals to operate the windmill;

e) The design of the windmill shall conform to applicable industry standards, including those of the American National Standards Institute. The applicant shall submit certificates of design compliance obtained by the equipment manufactures from Underwriters Laboratories, Debt Norske VERITAS, Germanishcer Lloyd Wind Energies, and or other similar certifying organizations;

f) The windmill shall comply with the state Uniform Construction Code;

g) A windmill shall not be climbable up to fifteen (15) feet above ground level. A windmill shall be fitted with any anti-climbing devices recommended by the windmill manufacture for the type of the installation proposed, All access doors to the windmill and electrical equipment shall be locked or fenced, as appropriate, to prevent entry by non-authorized persons;

h) The maximum structure height of a windmill shall be thirty-five (35) feet;

i) No signs or lights shall be mounted on a windmill except for any warning signs required by the Uniform Construction Code or other applicable governmental agencies;

DRAFT

j) All equipment buildings shall comply with the yard, setback, height or other requirements and restrictions applicable to a principal structure located in the same zoning district; and

k) If a windmill remains unused for a period of twelve (12) consecutive months, then the landowner shall, at his or her expense, dismantle and remove the subject windmill within six (6) months of the expiration of such twelve (12)- month period. The landowner shall also comply with the following requirements;

i. The landowner shall remove the windmill and related buildings, cabling, electrical/ mechanical equipment, foundations to a depth of thirty-six (36) inches and other associated facilities;

ii. Disturbed earth shall be graded and re-seeded; and

iii. If the landowner of the windmill fails to remove the subject windmill and reclaim the site as required by this section, then the Municipality may remove or cause the removal of the subject windmill and reclamation of the site. Any removal or reclamation cost incurred by the Municipality that is not recovered from the landowner of the windmill shall become a lien on the property where the removal or reclamation takes place and may be collected from the owner of the subject property in the same manner as property taxes.

§1212 Parties Appellant before the Board (Appeals)

Appeals under §1208.A, §1208.B, §1208.C, §1208.D, §1208.E and §1208.G may be filed with the Board in writing by the landowner affected, by any officer or agency of the Municipality or any person aggrieved. Requests for a variance under §1209 may be filed with the Board only by any landowner or any tenant with the permission of such landowner.

§1213 Time Limitations

A. No person shall be allowed to file any proceeding with the Board later than thirty (30) days after an application for development, preliminary or final, has been approved by an appropriate Municipal officer, agency or body, if such proceeding is designed to secure reversal or to limit the approval in any manner, unless such person alleges and proves that he had no notice, knowledge or reason to believe such approval had been given. If such person has succeeded to his interest after such approval, he shall be bound by the knowledge of his predecessor in interest;

B. The failure of anyone, other than the landowner, to appeal from an adverse decision on a tentative plan pursuant to the MPC or from an adverse decision by the Zoning Officer on a challenge to the validity of this Ordinance or Zoning Map pursuant to Section 916.2 of the MPC, shall preclude an appeal from a final approval, except in the case where the final submission substantially deviates from the approved tentative or preliminary approval; and

C. All appeals from the determinations adverse to the landowner shall be filed by the landowner within thirty (30) days after notice of the determination is issued, except appeals of the Zoning Officer's issuance of an enforcement notice, which shall be filed within ten (10) days after receipt of the enforcement notice.

DRAFT

§1214 Stay Of Proceedings

A. Upon the filing of any proceedings referred to in §1212, and during its pendency before the Board, all land development pursuant to any challenged ordinance, order or approval of the Zoning Officer or any other Municipal agency or body and all official action thereunder shall be stayed unless the Zoning Officer or any other appropriate agency or body certifies to the Zoning Hearing Board facts indicating that such a stay would cause imminent peril to life or property, in which case the development or official action shall not be stayed otherwise than by a restraining order, which may be granted by the Zoning Hearing Board or by the court having jurisdiction of zoning appeals, on petition, after notice to the Zoning Officer or other appropriate agency or body. When an application for development, preliminary or final, has been duly approved and proceedings designed to reverse or limit the approval are filed with the Zoning Hearing Board by persons other than the applicant, the applicant may petition the court having jurisdiction of zoning appeals to order such persons to post bond as a condition to continuing the proceedings before the Zoning Hearing Board;

B. After the petition is presented, the court shall hold a hearing to determine if the filing of the appeal is frivolous. At the hearing, evidence may be presented on the merits of the case. It shall be the burden of the applicant for a bond to prove the appeal is frivolous. After consideration of all the evidence presented, if the court determines that the appeal is frivolous, it shall grant the petition for a bond. The right to petition the court to order the appellants to post bond may be waived by the appellee, but such waiver may be revoked by him if an appeal is taken from a final decision of the court;

C. The question whether or not such petition should be granted and the amount of the bond shall be within the sound discretion of the court. An order denying a petition for bond shall be interlocutory. An order directing the responding party to post bond shall be interlocutory;

D. If an appeal is taken by a respondent to the petition for a bond from an order of the court dismissing a zoning appeal for refusal to post a bond and the appellate court sustains the order of the court below to post a bond, the respondent to the petition for a bond, upon motion of the petitioner and after hearing in the court having jurisdiction of zoning appeals, shall be liable for all reasonable costs, expenses and attorney fees incurred by the petitioner.

~ END OF SECTION ~

DRAFT

THIS PAGE INTENTIONALLY LEFT BLANK

DRAFT

ARTICLE XIII – PLANNING COMMISSION

§1301 Membership

A. The Planning Commission of the Municipality shall consist of seven (7) residents of the Municipality, who shall be appointed by Council in a manner prescribed by the Municipalities Home Rule Charter. The term of each member of the Commission shall be for four (4) years, or until his successor is appointed and qualified, except that the terms of the members shall be so fixed that no more than two (2) shall be reappointed or replaced during any future calendar year. Members of the commission shall hold no elected or appointed office of the Municipality or be an employee of the Municipality.

B. Members of the Planning Commission may receive compensation for the performance of their duties as may be fixed by Council, but in no case shall it exceed the rate of compensation authorized to be paid to the members of Council. Without exception, members of the Planning Commission may be reimbursed for necessary and responsible expenses.

§1302 Applicability of the Municipalities Planning Code

All provisions of the Municipalities Planning Code (MPC) (Act of 1968, P.L. 805, No. 247 as reenacted and amended), as now or hereafter amended, reenacted or applied including, but not limited to, the conduct of hearings and the making of decisions, shall be applicable to the Planning Commission. When there are conflicts or inconsistencies between this Ordinance and the Municipalities Planning Code (MPC), the more stringent regulations shall apply.

§1303 Removal of Members

Any member once qualified and appointed may be removed from office for malfeasance, misfeasance or nonfeasance in office or for other just cause by a majority vote of Council taken after the member has received fifteen (15) days' advance notice of the intent to take such a vote. A public hearing shall be held in connection with the vote if the member shall request it in writing. Any appointment to fill a vacancy created by removal shall only be for the unexpired term.

§1304 Organization of the Planning Commission

The Planning Commission shall elect a chair and vice-chair and such other officers as it determines necessary. Officers shall serve annual terms and may succeed themselves. The Planning Commission may make and alter bylaws, rules, and regulations to govern its organization and procedures consistent with Municipal ordinances and the laws of the Commonwealth of Pennsylvania. The Planning Commission shall keep a full record of its business and shall annually make a written report by March 1 of each year of its activities to Council. Interim reports may be made as often as may be necessary or as requested by Council. The Planning Commission shall promptly notify Council of any vacancies which occur. Appointments to fill vacancies shall be only for the unexpired portion of the term.

§1305 Expenditures for Services

Within the limits of funds appropriated by Council, the Planning Commission may employ or contract for secretaries, clerks, legal counsel, consultants and other technical and clerical services. Members of the Planning Commission may receive compensation for the performance of their duties, as may be fixed by Council, but in no case shall it exceed the rate of compensation authorized to be paid to the members of Council.

DRAFT

§1306 Powers and Duties of the Planning Commission

A. The Planning Commission shall function as an advisory body to Council in matters relating to planning, zoning and development of the Municipality in accordance with the purpose and intent of the Home Rule Charter and MPC as now enacted or as hereafter amended.

B. The Planning Commission shall perform such advisory functions as shall be requested from time to time by Council and in performance of such advisory functions as so requested shall have such powers and duties as are granted and established by the MPC as now enacted or as hereafter amended. The matters which Council may request of the Planning Commission shall be limited to the following:

1) Prepare the comprehensive plan for the development of the Municipality as set forth in the MPC and present it for consideration of Council and review the comprehensive plan at least every ten (10) years;

2) Maintain and keep on file records of its action. All records and files of the Planning Commission shall be in the possession of Council;

3) Make recommendations to Council concerning the adoption or amendment of an official map;

4) Prepare and present to the Council a zoning ordinance and make recommendations to the Council on proposed amendments to it as set forth in the MPC;

5) Prepare, recommend and administer subdivision and land development and planned residential development regulations as set forth in the MPC;

6) Prepare and present to Council a building code and a housing code and make recommendations concerning proposed amendments thereto;

7) Do such other acts or make such studies as may be necessary to fulfill the duties and obligations imposed by this Ordinance;

8) Prepare and present to Council an environmental study;

9) Submit to Council a recommended capital improvement program;

10) Promote public interest in, and an understanding of, the comprehensive plan and planning;

11) Make recommendations to governmental, civic and private agencies and individuals as to the effectiveness of the proposals of such agencies and individuals;

12) Hold public hearings and meetings;

13) Present testimony before any Zoning Hearing Board, authority, commission or appropriate governmental agency;

14) Require from other departments and agencies of the Municipality such available information as relates to the work of the planning commission;

DRAFT

15) In the performance of its functions, enter upon any lands to make examination and surveys with the consent of the property owner;

16) Prepare and present to Council a study regarding the feasibility and practicability of using renewable energy sources in specific areas within the Municipality;

17) Review the zoning ordinance, Subdivision and Land Development Ordinance, official map, provisions for planned residential development and such other ordinances and regulations governing the development of land no less frequently than it reviews the comprehensive plan;

18) Require proposals for land subdivisions and other uses of land having or likely to have environmental impact, to contain an environmental impact statement related to the proposed development, including but not limited to the effect of the proposed use on public facilities, drainage systems, traffic flow, public safety, schools and recreation; and

19) Seek the advice of the Municipal Engineer before doing any act or making any recommendations involving engineering considerations, the same with respect to the following in their fields of expertise:

    a) The Municipal Planning Staff or Consultant;

    b) The Municipal Fire Official;

    c) The Municipal Zoning Officer;

    d) The Municipal Solicitor

C. Council may employ administrative and technical services to aid in carrying out the provisions of this Ordinance either as consultants on particular matters or as regular employees of the Municipality. A county planning agency, with the consent of Council may perform planning services for the Municipality and the Municipality may enter into agreements or contracts for such work;

D. The Planning Commission may with the consent of Council, accept and utilize any funds, personnel or other assistance made available by the county, the Commonwealth of Pennsylvania or the federal government or any of their agencies, or from private sources. Council may enter into agreements or contracts regarding the acceptance or utilization of the funds or assistance in accordance with the governmental procedures of the Municipality.

~ END OF SECTION ~

THIS PAGE INTENTIONALLY LEFT BLANK

DRAFT

§1401 Appointment of the Zoning Officer

The Zoning Officer shall be appointed as required by the Monroeville Home Rule Charter. The Zoning Officer shall meet qualifications established by the Municipality and shall be able to demonstrate to the satisfaction of the Municipality a working knowledge of municipal zoning.

§1402 Duties of the Zoning Officer

The Zoning Officer shall administer and enforce the provisions of this Ordinance, and amendments hereto, in accordance with its literal terms, and shall not have the power to permit any construction or any use or change of use, which does not conform, to this Ordinance. The Zoning Officer shall have the authority to make inspections necessary to determine compliance with this Ordinance, and shall maintain records thereof and shall have the authority to issue an enforcement notice and a cease and desist order upon determination that a violation has occurred. The Zoning Officer's duties shall include the following:

A. Receive and examine all zoning permit applications;

B. Notify applicants of any deficiencies in applications and request additional information;

C. Issue zoning permits and zoning occupancy certificates for all applications that have been reviewed and approved according to provisions of this Ordinance and any applicable ordinances;

D. Receive, review and issue permits for fences, accessory structures, signs and temporary uses;

E. Review, file and forward to the Zoning Hearing Board, the records of all appeals and all applications for variances, expansion of nonconforming uses and special exceptions and maintain records thereof;

F. Receive, file and forward to the Planning Commission for recommendation, and to the Council for approval, all applications for conditional uses prior to considering issuance of a zoning permit or a zoning occupancy certificate for the proposed use and maintain records thereof;

G. Inspect buildings, structures and uses of land to determine compliance with the provisions of this Ordinance;

H. Issue enforcement notices for violation of any provision of this Ordinance in accordance to the requirements of §1403;

I. Initiate civil enforcement proceedings for failure to comply with enforcement notices;

J. Revoke any order or permit under a mistake of fact or contrary to the provisions of this Ordinance;

K. Record and file all applications for zoning approvals, zoning permits and/or zoning occupancy certificates with accompanying plans and documents and maintain those files as public record; and

DRAFT

L. Register and maintain records of nonconforming uses, structures and lots under this Ordinance.

§1403 Enforcement

A. Violations - Failure to comply with any provisions of this Ordinance, failure to secure zoning approval prior to the erection, construction, structural alteration, addition or occupancy of a building or structure or failure to secure a zoning permit and/ or zoning occupancy certificate for the use or change in use or occupancy of structures or land shall be a violation of this Ordinance; and the municipality shall initiate enforcement proceedings by sending an informal notice;

B. Enforcement Notice - The enforcement notice shall be sent to the owner of record of the parcel on which the violation has occurred, to any person who filed a written request to receive enforcement notices regarding that parcel, and to any other person requested in writing by the owner of record. The enforcement notice shall contain the following:

1) The name of the owner of record and any other person against whom the Municipality intends to take action;

2) The location of the property in violation;

3) The specific violation with a description of the requirements which have not been met, citing in each instance the applicable provisions of the ordinance;

4) The date before which the steps for compliance must be commenced and the date before which the steps must be completed;

5) That the recipient of the notice has the right to appeal to the Zoning Hearing Board within 30 days in accordance with the procedures set forth in this Ordinance; and

6) That failure to comply with the enforcement notice within the time specified, unless extended by appeal to the Zoning Hearing Board, constitutes a violation, with possible sanctions clearly described.

C. In any appeal of enforcement notice to the Zoning Hearing Board, the Municipality shall have responsibility of presenting its evidence first.

D. Causes of Action - If any building, structure, landscaping or land is, or is proposed to be, erected, constructed, reconstructed, altered, converted, maintained or used in violation of any ordinance enacted under this act or prior enabling laws, the governing body or, with the approval of the governing body, the Zoning Officer of the Municipality, or any aggrieved owner or tenant of real property who shows that his property or person will be substantially affected by the alleged violation, in addition to other remedies, may institute any appropriate action or proceeding to prevent, restrain, correct or abate such building, structure, landscaping or land, or to prevent, in or about such premises, any act, conduct, business or use constituting a violation. When any such action is instituted by a landowner or tenant, notice of that action shall be served upon the Municipality at least thirty (30) days prior to the time the action is begun by serving a copy of the complaint on the governing body of the Municipality. No such action may be maintained until such notice has been given.

§1404 Enforcement Remedies

DRAFT

A. Except when a different penalty is provided, any person, partnership or corporation who or which has violated or permitted the violation of the provisions of this Ordinance shall, upon being found liable therefore in a civil enforcement proceeding commenced by the Municipality, pay a judgment of not more than five hundred dollars ($500.00) plus all court costs, including reasonable attorney fees incurred by the Municipality as a result thereof. No judgment shall commence or be imposed, levied or payable until the date of determination of a violation by the District Justice. If the defendant neither pays nor timely appeals the judgment, the Municipality may enforce the judgment pursuant to the applicable rules of civil procedure;

B. Each day that a violation continues shall constitute a separate violation, unless the District Justice, determining that there has been a violation, further determines that there was a good faith basis for the person, partnership or cooperation violating this Ordinance to have believed that there was no such violation, in which event there shall be deemed to have been only one (1) such violation until the fifth day following the date of the determination of a violation by the District Justice and thereafter each day that a violation continues shall constitute a separate violation. All judgments, costs and reasonable attorney fees collected for the violation of this Ordinance shall be paid over to the Municipality;

C. The Allegheny County Court of Common Pleas, upon petition, may grant an order of stay, upon cause shown, tolling the per diem fine pending a final adjudication of the violation and judgment; and

D. Nothing contained in this subsection shall be construed or interpreted to grant to any person or entity other than the Municipality the right to commence any action for enforcement pursuant to this subsection.

§1405 General Permit Regulations

A. No use of land shall be made or any building or structure constructed, altered, remodeled, sold, leased, occupied or used, nor any existing use of a building, structure or land be changed until a zoning permit and/or zoning occupancy certificate has been issued by the Zoning Officer;

B. The improvements of land preliminary to any use of such land shall not be commenced prior to the issuance of the zoning permit and/or zoning occupancy certificate; and

C. Any permit issued in conflict with the provisions of this Ordinance shall be invalid.

§1406 Permit Application and Issuance Procedure (Zoning Permit)

A. Whenever the proposed activity, whether new construction or alteration of an existing use, requires a building permit, applications for a zoning permit shall be made prior to or simultaneously with the application for the building permit. The building permit shall not be issued until the zoning permit has been granted;

B. When no building permit is required, the application for the zoning permit and zoning occupancy certificate may be made at any time prior to the use or occupancy of the structure or land;

C. The owner or the owner's authorized agent shall make application for a zoning permit in writing on a form furnished by the Municipality and shall include the statement of the intended use of the building. At a minimum, the following information shall be provided:

DRAFT

1) Two (2) copies of a property survey, drawn to scale, showing: key location map; graphic scale; North arrow; closest intersecting public road; exact dimensions and total acreage of the lot(s) or parcel(s); zoning of lots and adjoining lots; exact location and exterior dimensions of existing and proposed building(s) or other structure(s); exact dimensions of front, side and rear yards for all principal and accessory structures; and any other data as may be deemed necessary and be requested by the Zoning Officer to determine compliance with this Ordinance;

2) The Zoning Officer may require an applicant to furnish a survey of the property by a surveyor registered with the state of Pennsylvania when complete and accurate information is not readily available from existing records;

3) The Zoning Officer may require additional information to determine compliance with this Ordinance. It shall be the duty of the Zoning Officer to review the application to determine if all necessary information has been submitted and request more information of the applicant; and

4) Unless such requirement is waived by Council, all applications for a zoning permit shall be accompanied by a fee, to be based on the Fee Schedule as adopted by the Municipality.

D. The Zoning Officer shall not issue the zoning permit or zoning occupancy certificate unless the property complies with this Ordinance, the Pennsylvania Uniform Construction Code (PA UCC) and amendments, the Subdivision and Land Development Ordinance, the Storm Water Management Ordinance and all other applicable municipal, county, state and federal laws, ordinance and regulations, and until all other required approvals and permits have been obtained from applicable municipal, county, state and federal agencies;

E. When approvals are not required by other Municipal agencies or governmental entities, the Zoning Officer shall review and approve or disapprove the application;

F. An application for a zoning permit does not permit occupancy. A zoning occupancy certificate is also required. Under certain circumstances, application for any approval of a zoning permit and zoning occupancy certificate may be combined;

G. <u>ZONING OCCUPANCY PERMITS:</u> Prior to occupancy of land or structure or to the change of tenants, ownership, or occupants of any structure, land or premises, or any portion thereof, a Zoning Occupancy Permit shall be obtained stating that the premises is in full compliance with this Zoning Ordinance;

H. A Zoning Occupancy Permit shall be revocable where the Zoning Officer determines that the occupant is not complying with every condition required by the issuance of said permit;

I. Upon completion of the applied-for work, the applicant shall notify the Zoning Officer, who shall examine the building, structure or use of land involved. If the Zoning Officer shall find that such construction, erection, structural alternation or use of building and land has been completed in accordance with the provisions of this ordinance and other applicable ordinances, the zoning occupancy certificate shall be issued;

J. Period of Validity - A zoning permit shall become null and void within one (1) year from date of issuance, unless the construction, altering, remodeling of a building or structure

DRAFT

is commenced or a use of land or building is commenced. The landowner shall be responsible for applying for a renewed permit at least sixty (60) days prior to the expiration of an existing permit. The Zoning Officer shall be responsible for scheduling inspections related thereto;

K. Prior to continuance of the activity or change for which the original permit was issued, a new Zoning Permit must be obtained. The Zoning Permit may be renewed by the Zoning Officer if there has been no change in applicable zoning regulations, and if such renewal is requested within sixty (60) days prior to the date of expiration of said Zoning Permit. If applicable zoning regulations have been changed, the full review and approval procedure required by this Ordinance shall apply. Any zoning permit issued by authorization of the Board shall not be renewed except by authority of the Board;

L. Within sixty days after the receipt of an application, the Zoning Officer shall either approve or disapprove the application or submit the application to appropriate review agencies in conformance with the provisions of this Ordinance. All Zoning Permits shall be conditional upon the commencement of work within one year and substantial completion within two and one half years. One copy of the plans shall be returned to the applicant by the Zoning Officer after the Zoning Officer shall have marked such copy either as approved or disapproved and attested to same by his signature on such copy. One copy of plans, similarly marked, shall be retained by the Zoning Officer. The Zoning Officer shall issue a placard, to be posted in a conspicuous place on the property in question. Attesting to the fact that the use or alterations is in conformance with the provisions of this Ordinance;

M. Prior to the issuance of a zoning permit for any use in a floodplain the Zoning Officer shall require the applicant to indicate compliance with all applicable State and Federal laws;

N. Inspection - It shall be the duty of the Zoning Officer or a fully appointed representative, to make the following minimum number of inspections on property for which a permit has been issued:

1) At the beginning of construction - A record shall be made indicating the time and date of the inspection and finding of the Zoning Officer in regard to the conformance of construction with plans approved with the application of the building. If the actual construction does not conform to the application, the Zoning Officer may issue a written notice of violation and such violation shall be discontinued. Upon proper correction of the violation and receipt of written notice from the Zoning Officer, construction shall proceed;

2) If the Zoning Officer finds that work does not comply with the applicable standards, or that there has been a misrepresentation by any applicant, the Zoning Officer shall revoke the zoning permit;

3) If the Zoning Officer finds reasonable grounds to believe that there has been a violation of any provisions of this Ordinance, he shall give notice of such alleged violation. Such notice shall (a) be in writing; (b) include a statement of the reasons for its issuance; (c) allow a reasonable time not to exceed a period of thirty (30) days for the performance of any act it requires; (d) be served upon the property owner or his agent in accordance with law; and (e) contain an outline of remedial action which, if taken, will effect compliance with the provisions of this Ordinance; and

DRAFT

4) At the completion of construction - A record shall be made indicating the time and date of the inspection; the findings of the Zoning Officer in regard to conformance of this ordinance; and the opinion of the Zoning Officer in regard to the issuance of a zoning occupancy certificate.

§1407 Fee Schedule

A. Council shall, by ordinance, adopt a fee schedule and a collection procedure for zoning approvals, planned residential development, planned nonresidential development, conditional uses, and uses by special exception, variances, zoning amendments and other matters pertaining to this zoning ordinance. The fee schedule shall be duly recorded in the ordinance of the Municipality and posted in the office of the Zoning Officer. The fee schedule may be revised or amended only by ordinance by Council;

B. No application for any zoning approval, planned residential development, conditional use, uses by special exception, variance, zoning amendment or other matter shall be considered unless or until such costs, charges, fees or expenses have been paid in full, nor shall any action be taken on proceedings unless or until the preliminary charges or fees have been paid in full.

§1408 Guarantee Of Improvements (Performance Bond—Refer to SALDO Ord. 2525)

§1409 Amendments to Zoning Ordinance

Amendments of this Ordinance may be initiated by Council, by the Planning Commission, or by a petition of a landowner within the Municipality in accordance with the following provisions:

A. Petitions for amendment by landowners, other than curative amendments under §1410, shall be filed in writing with the Zoning Officer, and the petitioner, upon such filing, shall pay a filing fee and/or review deposit in accordance with the schedule fixed by ordinance of Council;

B. Any proposed amendment other than one proposed by the Planning Commission shall be referred to the Planning Commission for review at least thirty (30) days prior to the next regularly scheduled Planning Commission meeting. The Planning Commission shall review the proposed amendment and report its findings and recommendations, in writing, to the Council and to the petitioner;

C. Following the Planning Commission's review, a public hearing will be scheduled before Council, on the proposed amendment and a copy of the same submitted to the Allegheny County Department of Economic Development or its successor agency at least thirty (30) days prior to the public hearing in accordance with the requirements of the MPC;

D. If the proposed amendment involves a Zoning Map change, notice of the public hearing shall be conspicuously posted by the Municipality at points deemed sufficient by it along the tract to notify potentially interested citizens. The affected tract shall be posted at least one (1) week prior to the date of the hearing;

E. Notice of any proposed Zoning Map change shall also be mailed by the Municipality at least thirty (30) days prior to the public hearing by first class mail to the addresses to which real estate tax bills are sent for all real property located within the area being rezoned, as evidenced by tax records within the possession of the Council. The notice shall include the location, date and time of the public hearing. A good faith effort and

DRAFT

substantial compliance shall satisfy the requirements of this subsection. This subsection shall not apply to a comprehensive rezoning;

F. If, after any public hearing held upon an amendment, the proposed amendment is substantially revised or further revised to include land previously not affected by it, then the Council shall hold another public hearing pursuant to public notice before proceeding to vote on the amendment;

G. The Council shall act on a proposed amendment to this Ordinance within ninety (90) days of the date of the meeting at which the public hearing on the amendment is closed. If the Council fails to so act within the said ninety (90)-day period, then the proposed amendment shall be deemed denied;

H. Within thirty (30) days after enactment, a certified copy of the amendment to this Ordinance shall be forwarded to the Allegheny County Department of Economic Development or its successor agency; and

I. The proposed amendment shall also be published, advertised and made available to the public in accordance with the requirements of the MPC.

§1410 Landowner Curative Amendments

Any landowner who wishes to challenge, on substantive grounds, the validity of this Ordinance or the Zoning Map or any provision thereof which prohibits or restricts the use or development of land in which the landowner has an interest, may prepare and submit a curative amendment to the Council, in the form the landowner proposes it to be adopted, together with a written request that his/her challenge and proposed amendment be heard and decided in accordance with the requirements of the MPC. Council shall hold a public hearing, pursuant to public notice, on the matter within sixty (60) days of receiving an administratively complete curative amendment request. Public notice of the public hearing shall be given by the Municipality in accordance with the requirements of the MPC. Public hearings shall be conducted and held in accordance with the applicable provisions of the MPC. Council shall comply with all applicable requirements of the MPC regarding the conduct of hearings and decisions related thereto.

A. Referral to Planning Commission - The curative amendment and challenge shall be referred to the Planning Commission and the Allegheny County Department of Economic Development or its successor agency at least thirty (30) days prior to the public hearing for review and comment;

B. Declaration of Invalidity by the Court - If the Municipality does not accept a landowner's curative amendment brought in accordance with this section and a court subsequently rules that the challenge has merit, the court's decision shall not result in a declaration of invalidity for this entire Ordinance, but only for those provisions which specifically relate to the landowner's curative amendment and challenge;

C. Evaluation of Merits of Curative Amendment - If Council determines that a validity challenge has merit, then Council may accept a landowner's curative amendment, with or without revision, or may adopt an alternative amendment, which will cure the challenged defects. Council shall consider the curative amendments, plans and explanatory material submitted by the landowner and shall also consider:

1) The impact of the proposal upon roads, sewer facilities, water supplies, schools and other public service facilities;

DRAFT

2) If the proposal is for a residential use, the impact of the proposal upon regional housing needs and the effectiveness of the proposal in providing housing units of a type actually available to and affordable by classes of persons otherwise unlawfully excluded by the challenged provisions of this Ordinance or the Zoning Map;

3) The suitability of the lot's soils, slopes, woodlands, wetlands, floodplains, aquifers, natural resources and natural features for the intensity of the proposed uses;

4) The impact of the proposed use on the lot's soils, slopes, woodlands, wetlands, floodplains, natural resources and natural features, the degree to which these are protected or destroyed, the tolerance of the resources to development and any adverse environmental impacts; and

5) The impact of the proposal on the preservation of agriculture and other land uses which are essential to the public health, safety and welfare.

§1411 Municipal Curative Amendments

If Council determines that this Ordinance or a portion thereof is substantively invalid, it may implement the procedure for municipal curative amendments provided in Section 609.2 of the MPC.

~ END OF SECTION ~

DRAFT